BRUNSWICK CITY COUNCIL AGENDA

Brian Ousley At-Large	Nicholas Hanek Ward 2	Patricia Hanek At-Large	Kenneth Fisher Law Director	Carl S. DeForest City Manager	Ron Falconi Mayor	Fijabi Julien-Gallam Council Clerk	Michael Abella Jr. Ward 1	Andrea Rodriguez Ward 3	Joseph Delsanter At-Large	Anthony Capretta Ward 4

Administration Representatives

JUNE 24, 2019
7:30 PM
IN COUNCIL CHAMBERS

1. Prayer and Pledge of Allegiance

2. Roll Call of Members

3. Correspondence

4. Approval of Minutes

   (a) Regular Council Meeting Minutes dated June 10, 2019

5. Mayor's Report:

   (a) Mayor's Update

6. Clerk of Council's Report

7. Council Committee Reports:

   Economic Development Committee.....Mr. Hanek

   Services, Utilities, Technology & Cable Committee.....Mrs. Rodriguez

   Services Committee Meeting Minutes dated June 10, 2019

   Finance Committee.....Mrs. Hanek

   Safety & Environment Committee.....Mr. Ousley

   Planning & Zoning Committee.....Mr. Delsanter

   Parks, Recreation & Community Committee.....Mr. Abella Jr.

   Building & Building Code Committee.....Mr. Capretta

   Building Code Committee Meeting Minutes dated June 10, 2019

8. Other Boards and Commissions

   (a) Committee of the Whole Meeting Minutes dated June 10, 2019

9. Petitions from the Public on Legislation

10. Reading of Legislation and Action on Legislation:

a. 3rd Reading(s)

b. 2nd Reading(s)

ORD. NO. 37-19 - An emergency ordinance amending Chapter 1060 of the City of Brunswick Codified Ordinances. - **2nd Reading** (Committee-of-the-Whole, *Administration/Paul Barnett*)

RES. NO. 38-19 - An emergency resolution authorizing the City Manager to enter into a three (3) year agreement with Zimmerman Paint Contractors, CO. for the provision of pavement marking services. - **2nd Reading** (Services, Utilities, Technology & Cable Committee, *Administration/Paul Barnett*)

c. 1st Reading(s)

ORD. NO. 39-19 - An emergency ordinance extending a temporary moratorium on the acceptance and processing of applications for zoning, occupancy and/or building permit approvals for warehousing and motor freight garages and truck or transfer terminal uses in the I-L Light Industrial district and the issuance of such approvals. - **1st Reading** (To be brought from Committee-of-the-Whole, *Administration/Nicholas Hanek*)

ORD. NO. 40-19 - An emergency ordinance extending a temporary moratorium on the acceptance and processing of applications for zoning, occupancy, conditional use and/or building permit approvals for multi-family dwelling units in all zoning districts and the issuance of such approvals. - **1st Reading** (To be brought from Committee-of-the-Whole, *Administration/Brian Ousley*)

RES. NO. 41-19 - An emergency resolution authorizing the City Manager to have entered into a Housing Revolving Loan Fund Administration Agreement with the State of Ohio, Development Services Agency. - **1st Reading** (To be brought from Committee-of-the-Whole, *Administration/Grant Aungst*)

ORD. NO. 42-19 - An emergency ordinance to advance funds **- 1st Reading** (To be brought from Finance Committee, *Administration/Todd Fischer*)

ORD. NO. 43-19 - An emergency ordinance authorizing the transfer of the remaining balances in the Special Assessment Grafton Road III Bond Retirement Sub-Fund to the General Obligation Bond Retirement Fund - **1st Reading** (To be brought from Finance Committee, *Administration/Todd Fischer*)

ORD. NO. 44-19 - An emergency Ordinance amending Ordinances #89-18 and #20-19 to include amendments to the appropriations budget for the year ending December 31, 2019 as incorporated in Exhibit "A" attached hereto. **- 1st Reading** (To be brought from the Finance Committee, *Administration/Todd Fischer*)

RES. NO. 45-19 - An emergency resolution ratifying the actions of the City Manager in executing the 2019 Community and Litter Grant agreement with the Ohio Environmental Protection Agency. - **1st Reading** (To be brought from Committee-of-the-Whole, *Administration/Paul Barnett*)

RES. NO. 46-19 - A resolution authorizing direct payment to Melway Paving Company, INC. for the city's proportionate share of the Laurel Road and South Carpenter Road Resurfacing Project. - **1st Reading** (To be brought from Services, Utilities, Technology & Cable Committee, *Administration/Paul Barnett*)

11. City Manager's Report

12. Administrative Departments

13. Open Forum

14. Unfinished Business

15. New Business

16. Adjournment

CITY OF BRUNSWICK, OHIO

MINUTES OF COUNCIL

MONDAY, JUNE 10, 2019

Prayer and Pledge of Allegiance: The regular meeting of Brunswick City Council was called to order by Mayor Ron Falconi at 7:35 p.m. at the Municipal Complex.

Roll Call of Members showed the following Council Members present: Nicholas Hanek, Andrea Rodriguez, Anthony Capretta, Joseph Delsanter, Patricia Hanek, and Brian Ousley.

Others Present: Mayor Ron Falconi, Clerk of Council Fijabi Julien-Gallam, City Manager Carl S. DeForest, and Law Director Ken Fisher.

Nicholas Hanek moved to excuse Councilman Michael Abella Jr. with just cause, seconded by Brian Ousley. Roll Call - Ayes - 6, Patricia Hanek, Joseph Delsanter, Brian Ousley, Nicholas Hanek, Anthony Capretta, Andrea Rodriguez. Nays - 0. Motion Carried.

Correspondence: There was none.

Approval of Minutes:

Nicholas Hanek moved to approve the regular Council Meeting Minutes dated May 20, 2019, as written, seconded by Patricia Hanek. Roll Call - Ayes - 6, Patricia Hanek, Brian Ousley, Nicholas Hanek, Andrea Rodriguez, Joseph Delsanter, Anthony Capretta. Nays - 0. Motion Carried.

Mayor's Report:

Proclamation to proclaim June 13-20, 2019 42nd Annual National Nursing Assistants' Week:

Mayor Ron Falconi presented a proclamation to Pearlview Rehab & Wellness Center to recognize the 42nd Annual National Nursing Assistant's Week.

Kimberly Corrigan thanked the Mayor and the City Council for their ongoing support. Ms. Corrigan expressed that Pearlview is very proud to be hosting the 42nd Annual National Nursing Assistant's Week at their facility on Wednesday, June 19, 2019. She remarked that the nursing assistants are the backbone of their organization and in any healthcare organization.

Mayor Ron Falconi pulled item B from under the Mayor's Report from this Agenda.

Mayor's Court Financial Report for the month ending May 2019 will be posted on the website and added to the minutes for the record.

DRAFT

Clerk of Council's Report:

Clerk of Council Fijabi Julien-Gallam remarked that there is a change to the public interface for the Code of Ordinances, also known as Codified Ordinances, on the city's website. She explained that the Conway Greene Company has announced it will no longer be offering web hosting services. The code is now hosted directly on the American Legal Publishing website. She remarked that the Clerk's office is available to answer all questions for the codification website.

Council Committee Reports:

Economic Development Committee.....Mr. Hanek:

Nicholas Hanek moved to approve the Economic Development Committee formal Report dated May 21, 2019, as written, seconded by Patricia Hanek. Roll Call - Ayes - 6, Anthony Capretta, Nicholas Hanek, Andrea Rodriguez, Joseph Delsanter, Patricia Hanek, Brian Ousley. Nays - 0. Motion Carried.

Services, Utilities, Technology & Cable Committee.....Mrs. Rodriguez:

Andrea Rodriguez moved to approve the Services, Utilities, Technology & Cable Committee formal report dated May 20, 2019, as written, seconded by Anthony Capretta. Roll Call - Ayes - 6, Nicholas Hanek, Andrea Rodriguez, Joseph Delsanter, Patricia Hanek, Brian Ousley, Anthony Capretta. Nays - 0. Motion Carried.

Finance Committee.....Mrs. Hanek :

Mrs. Hanek had no formal reports this evening.

Safety & Environment Committee.....Mr. Ousley:

Mr. Ousley had no formal reports this evening.

Planning & Zoning Committee.....Mr. Delsanter:

Joseph Delsanter moved to approve the Planning & Zoning Committee Formal Report dated May 16, 2019, as written, seconded by Nicholas Hanek. Roll Call - Ayes - 6, Andrea Rodriguez, Brian Ousley, Nicholas Hanek, Joseph Delsanter, Anthony Capretta, Patricia Hanek. Nays - 0. Motion Carried.

Parks, Recreation & Community Committee.....Mr. Abella Jr.:

Mr. Capretta had no formal reports this evening.

Building & Building Code Committee.....Mr. Capretta:

DRAFT

Mr. Capretta had no formal reports this evening.

Other Boards and Commissions:

Nicholas Hanek moved to approve the Committee-of-the-Whole minutes dated May 20, 2019, as written, seconded by Brian Ousley. Roll Call - Ayes - 6, Nicholas Hanek, Brian Ousley, Andrea Rodriguez, Anthony Capretta, Joseph Delsanter, Patricia Hanek. Nays - 0. Motion Carried.

Petitions from the Public on Legislation: There was none.

Reading of Legislation and Action on Legislation:

3rd Reading(s)

ORD. NO. 32-19 - An emergency ordinance authorizing and adopting the proposed tax budget for the City of Brunswick, Ohio for the year beginning January 1, 2020 through December 31, 2020 - **3rd Reading** (Finance Committee, *Administration/Todd Fischer*):

Patricia Hanek moved to adopt Ordinance Number 32-19, seconded by Brian Ousley. Roll Call - Ayes - 6, Nicholas Hanek, Andrea Rodriguez, Anthony Capretta, Joseph Delsanter, Patricia Hanek, Brian Ousley. Nays - 0. Motion Carried.

Finance Director Todd Fischer remarked that in order to comply with the Ohio Revised Code Section 5705, the city's administration must annually adopt a tax budget, and submit the tax budget to the County Budget Commission by July. This document would allow the county auditor to prepare and compile the property tax estimates that the city will receive in order to use the money for operation or to do road projects.

2nd Reading(s) - There was none.

1st Reading(s)

ORD. NO. 37-19 - An emergency ordinance amending Chapter 1060 of the City of Brunswick Codified Ordinances. - **1st Reading** (To be brought from Committee-of-the-Whole, *Administration/Paul Barnett*):

ORD. NO. 37-19 - Mr. Hanek moved this ordinance to a second reading.

RES. NO. 38-19 - An emergency resolution authorizing the City Manager to enter into a three (3) year agreement with Zimmerman Paint Contractors, CO. for the provision of pavement marking services. - **1st Reading** (To be brought from Services, Utilities, Technology & Cable Committee, *Administration/Paul Barnett*):

RES. NO. 38-19 - Mrs. Rodriguez moved this resolution to a second reading.

DRAFT

City Manager's Report:

City Manager Carl DeForest

- Publicly thanked Service Director Paul Barnett for the presentation and information he provided about the new trash and recycling service that is expected to start on July 1, 2019. On Saturday, June 8, 2019, at the trash and recycling meeting, there were about 105 attendees.
- Noted that the Relay for Life was on Saturday, June 8, 2019, at 10:00 a.m. There were 26 teams that attended the meeting. They approximately raised $74,000 to $75,000 for the fight against cancer.
- Wished the United States Army a Happy Birthday. Mr. DeForest noted that June 14, 2019, is Flag Day.
- Reminded everyone that there is a collection box for retired flags in City Hall by the military memorial, across from the City Manager's Office. The Veterans of Foreign Wars (VFW) collects the flags, and then retire them in a ceremony at the Veterans of Foreign Wars (VFW) once a year.
- Remarked that the city's Fireworks display is behind the Brunswick High School on July 3, 2019, at 10:00 p.m. The rain date is July 5, 2019.
- Added that the Brunswick Community Band is performing on the stage, outside of the Brunswick Recreation Center on July 3, 2019, from 6:30 p.m. to 8:30 p.m. He encouraged everyone to attend.

Administrative Departments:

Finance Director Todd Fischer

- Remarked that the city's 2018 Financial Statements and Audit are complete, but the Auditors have not released it. Mr. Fischer noted that there is a post audit meeting on Thursday, June 13, 2019, at 6:00 p.m. that is excluded by State Law as an open public meeting under the sunshine laws.
- Added that there is a Financial Audit, Review & Advisory Committee meeting on Thursday, June 13, 2019, at 6:30 p.m. This meeting is open to the public.

Assistant Fire Chief Greg Glauner

- Remarked that the Division of Fire has responded to 1,493 calls so far for the year. This number signifies a 6% increase over the last year.
- Added that the Division of Fire completed approximately 160 initial business inspections.
- Remarked that the city-wide fire hydrant painting has started and approximately 50 hydrants have been painted safety red.

DRAFT

- Explained that the fire hydrant flushing has started. Mr. Glauner informed the residents that they need to flush their water and check for rust before using during the maintenance.
- Announced that the Citizens Firefighter Academy is from September 17, 2019, to October 8, 2019, and sign-ups are available at Fire Station #1. Natural Fire Prevention Week is October 6, 2019, to October 12, 2019.
- Remarked that the Division of Fire Community Open House at Fire Station #1 is on October 10, 2019.
- Noted that Firefighter/Paramedic Troy Hrdlicka has recently retired after 34 years of dedicated services to the City of Brunswick.
- Remarked that the Division of Fire is engaging in a tornado drill with all the skilled nursing facilities in the City of Brunswick on Friday, June 14, 2019.

Service Director Paul Barnett

- Remarked that the carts for the new trash and recycling program are expected to go out to residents starting on Monday, June 24, 2019. Mr. Barnett urged the residents to use their new carts as soon as they get them.
- Added that the rules and regulations for the new trash and recycling service are on the City's website.
- Remarked that the Concrete Panel Program has started.
- Added that the asphalt program and the catch basin project is expected to start after the July 4th holiday.
- Expressed that the North Carpenter Project is on schedule. Mr. Barnett explained the next phase of the project.

Councilman Brian Ousley questioned if a resident leaves their old trash can out when they are using their new carts from the City, it will be thrown out with their trash. Mr. Barnett explained that the contractor was told to dispose of the old trash cans if put out with the new trash cans.

Open Forum:

Brunswick Lake Park Dinosaur Trail

Glen Kuban, at 4726 Grayton Road, Cleveland, expressed that he was involved in the design and installation of the Dinosaur Trail at the Brunswick Lake Park. He expressed that he was surprised to read in the Brunswick Post article that there were plans to remove the trail from the park. Mr. Kuban explained that the trail has many benefits to the people and the economy in the City of Brunswick. The tracks on the trail are from actual dinosaur tracks. Mr. Kuban read key points about the Brunswick Lake "Dino Trail".

{Clerk notes: Glen Kuban's key points about the Brunswick Lake Dino Trail and his statement

are attached to the minutes.}

David Jarzen, at 12540 Edgewater Drive, Lakewood, remarked that he is a research associate at the Cleveland Museum of Natural History, a Professor at Kent State University and Baldwin Wallace. He noted that he had multiple opportunities to bring his students to the Dino Trail. He explained that this trail is the only one of its kind in Northeast Ohio to show people real dinosaur tracks. Mr. Jarzen noted that there are no real dinosaur tracks at the Cleveland Museum. He remarked that the trail is not a trip hazard. He expressed that he was pleased to know that his colleagues had the vision to put a Dino Trail in one of Brunswick's parks for people to see and for people to use. He expressed that the consideration is to remove something very beautiful, very wonderful, and very educational away from the City of Brunswick. Mr. Jarzen pleaded that the City Council reconsiders the removal of the Dino Trail, and to think about it carefully.

Susan Jarzen, at 12540 Edgewater Drive, Lakewood, remarked that she visited the Dino Trial with children, and she has enjoyed the trail herself. Mrs. Jarzen expressed that the Dino Tail is an educational tool. She noted that there is a sign at the park that explains what each dinosaur print is on the trail. She remarked that there should be an informational sign telling people that the Dino Trail has actual dinosaur tracks. Mrs. Jarzen reiterated that she does not want the city to remove the Dino Trail.

Donna Cole, at 635 Shaker Drive, Medina, remarked that she is here to support the Dino Trail. Ms. Cole expressed that the tracks are a marvelous addition to Medina County. She explained that her neighbor, who is a science teacher, didn't know a Dino Trail is in Medina County. Ms. Cole asked the City Council to reconsider removing the tracks.

Carl Fechko, at 20804 Parkwood LN, Strongsville, remarked that he is the president of the North Coast Fossil Club. Mr. Fechko noted that all of his grandchildren are fossil experts, and they enjoy visiting the Dino Trail. He explained that thousands of cars drive down State Route 303 everyday with kids, and they do not know that there is a dinosaur trail in Brunswick. The reason for this is because there is no sign to advertise the trail. He believed that the Dino Trail is a marvelous educational tool for people. He requested that the city, consider preserving the footprints and publicizing the trail, so more people could take advantage of the experience.

Unfinished Business: There was none.

New Business:

Considerations of the liquor permit transfer to Transform KM LLC. DBA KMART, 3301 Center Road, Brunswick, 44212 from KMART CORP DBA KMART 3286, 3301 Center Road, 3446 Center Road, Brunswick, Ohio 44212:

Council and the Administration had no objections to the liquor permit transfer request.

Brunswick Lake Park Discussion

Councilman Joseph Delsanter remarked that the Medina County Park District has direct oversight over the Brunswick Lake Park. He noted that Councilman Nicholas Hanek is the Chair of the Brunswick Lake Ad Hoc Committee that works with the Medina County Park District on the Brunswick Lake improvements. Mr. Delsanter wanted to know the status on the proposed plans for the Brunswick Lake Park.

City Manager Carl DeForest explained that the administration and Mr. Hanek had several meetings with the public, the Brunswick Lake Ad Hoc Committee, and the Medina County Park District over a period of nine months. He noted that there were about 20-25 people that attended meetings. There were many ideas presented at the meetings. One of them was to remove the dinosaur trail because of the location, and it was a hazard. Another one was to remove the arches that are located by Giant Eagle because of the deterioration and the maintenance. Mr. DeForest reiterated that they had a number of meetings, and they integrated Medina County Park District into the meetings. The Medina County Park District did a public presentation at the final meeting. He noted that the city's administration and the Medina County Park District took the information and the input they received from the community to come up with a generalized plan for the next 5-10 years.

Mr. DeForest reiterated to Mr. Delsanter that the meetings were open to the public.

Mr. Delsanter remarked that he would like to hear something more constructive than a few people that decided to remove education material from the park. He noted that the education material shouldn't be taken out, or it should be relocated to be of some use.

Mr. Hanek remarked that Mr. Delsanter is aware that the meetings were open to the public. He expressed that it is unfortunate that Mr. Delsanter's obligation prevented him from attending the meetings, reading the minutes, or involved in any of the planning demonstrations. Mr. Hanek noted that the background on the Brunswick Lake Park planning was available to every Council member. He remarked that many of the councilmembers did attend the meetings, participated in the discussions, asked questions, and provided feedback. He expressed that it is unfortunate that other members of the council did not participate in the process. He believed that their input would have been valuable. The Brunswick Lake Ad Hoc Committee went through the planning process with a lot of people and spent a lot of time and dedication with people that had specialized knowledge. He noted that someone on Facebook stated that no one ever invites them to anything. Mr. Hanek invited the individual to the meeting, and they attended the meeting to talk about different types of fish at the lake. He expressed that people throughout the city put a lot of time and effort into the Brunswick Lake Ad Hoc Committee. He reiterated that the meetings were open to everyone. He noted that the planning process is not done. The Medina County Park District put forward a proposal. Mr. Hanek, Mr. DeForest and Nate Eppink from Medina County Park District, Park and Recreation Director John Piepsny and countless others

worked hard on the backend of the planning process. He remarked that he and Councilman Michael Abella talked at length with Mr. Glen Kuban regarding the Dino Trail. He noted that they are looking into seeing if there is a possibility to move the Dino Trail. This is an elegant design and plan for the Brunswick Lake Park District. The Medina County Park District put a lot of the time and effort to put the use of the park. He reiterated that they received a lot of input from the public, and the plans for the park that are not all finalized. The Medina County Park District is not looking to implement the plans for the Brunswick Lake Park right away. Mr. Hanek explained that he received a lot of information on the Dinosaur Trail. He is aware of how the trail was created, who put the trail in, and the lack of maintenance. There has been no motion made at this time.

Mayor Ron Falconi wanted to know if the decision could be reverse regarding the arch and dinosaur trail removal.

Mr. Hanek explained that they could talk to Medina County Parks District, and express their opinions. He noted that the city has a good working relationship with the park district. They have to make a decision on how the public land works. He remarked that he is not in the business of making short term decision based on a whim. This situation has to be looked at as a coherent plan, carefully looked methodology on how the city presents public spaces in Brunswick. He expressed that people are asking for the city to do this. He remarked that he was not on the City Council when Dino trail plan was presented. He is working against what has happened before. Mr. Hanek wished he could go back in time and provide proper funding and maintenance structure for what happened before him. They are looking at all options.

Mr. Delsanter noted that Mr. Hanek did a wonderful job of expressing and defending his due diligence. He expressed that this wasn't about Mr. Hanek. Mr. Delsanter is aware of these types of meetings, but it doesn't hurt to bring those important changes to his attention. He remarked that the Dino Trail is a fine educational tool for children. He explained that they are not children, but they are making adult decisions. He is aware that there have been some decisions made by the park district, and they might be refutable. Mr. Delsanter is simply requesting someone to share the changes for the trail. He expressed his feelings regarding attendance at the meetings.

Councilman Anthony Capretta wanted to know if this was a done deal. Mr. Hanek remarked that the plans are not finalized.

Councilwoman Andrea Rodriguez remarked that as a resident of Brunswick for 12 years with eight children, she spent so much time at the Natural History Museum homeschooling her children in the basement. Mrs. Rodriguez did not know there was a Dino Trail a mile from her home. She noted that she would have taken her children there if she knew about the trail. She expressed that she can't be at all of the meetings for every cause. Mrs. Rodriguez hoped that the Dino Trail stays, so her grandchildren can enjoy it too.

Mr. Hanek pointed out that there is a lot more to the design than the proposed plans. He encouraged everyone to look at what and why the Medina County Park District is putting things in place. He believed that the park district spent the last year studying where people walk naturally in the park. They are looking at pulling the trail closer to the lake, adding additional parking, adding fishing piers and docks, and other activities for children to blend into a natural environment. Mr. Hanek expressed that he believes in a lot of the work that has been done by the parks district. He reiterated that he is not a park planning expert, but he believed that the Medina County Parks District reflects that role. He encouraged everyone to look carefully at the plan that was proposed.

Adjournment:

Nicholas Hanek moved to adjourn, seconded by Patricia Hanek. Roll Call - Ayes - 6, Patricia Hanek, Joseph Delsanter, Brian Ousley, Nicholas Hanek, Anthony Capretta, Andrea Rodriguez. Nays - 0. Motion Carried.

There being no further business, the meeting adjourned at 8:16 p.m.

Respectfully submitted,

Fijabi Julien-Gallam, CMC

Clerk of Council

_____

Mayor Ron Falconi

_____

Adopted

DRAFT

SERVICES, UTILITIES, TECHNOLOGY & CABLE COMMITTEE

June 10, 2019

IN ATTENDANCE: Chairwoman Andrea Rodriguez, Committee Member Anthony Capretta, Committee Member Nicholas Hanek, Patricia Hanek, Brian Ousley, Joseph Delsanter, City Manager/Safety Director Carl DeForest, Law Director Kenneth Fisher, Engineer Matt Jones, Service Director Paul Barnett, Chief Building Official Cliff Calaway, Council Clerk Fijabi Julien-Gallam, News Media.

The meeting convened at 6:08 p.m.

REVIEW LEGISLATION:

RES. NO. 38-19 – An emergency resolution authorizing the City Manager to enter into a three (3) year agreement with Zimmerman Paint Contractors, Co for the provision of pavement marking services

Mr. Barnett advised the agreement with Zimmerman Paint is for pavement markings citywide. Two bids were received and Zimmerman Paint was the lowest and best bidder. He pointed out the bid amount for 2019 was much higher than what the administration proposed an award for, he explained the reason for that being there was no reason to paint North Carpenter and all the side streets that come into North Carpenter, noting those are non-performed unit costs. The contract also has options for paving markings for the City Hall parking lot, BAT parking lot, Recreation Center parking lot, and Neura Park parking lot; however none of those areas need painted this year, and will be considered next year.

Mr. Barnett noted Zimmerman had the last two contracts with the City; the administration was pleased with their work and recommend awarding the contract to them again.

Mrs. Rodriguez asked if they were a local contractor, and Mr. Barnett answered in the negative, he noted there were no local contractors for pavement markings.

Mr. Capretta asked how long the City has been using this contractor, to Mr. Barnett's knowledge it has been at least the last six years.

Mr. Ousley knew in the past there was discussion about the paint marking being high reflective to last more than one season, and he did not think that was working very well.

To that, Mr. Barnett noted a thermoplastic material was used on Center Road; that material is used by the state and most cities on asphalt roadways, the thermoplastic material does not stick to concrete roadways. Mr. Barnett noted the material is supposed to last five to six years, unfortunately it did not hold up well on Center Road, and he thinks it was due to the weather conditions when it was used. Mr. Barnett noted the lane lines are all normal paint, but turn lanes were thermoplastic and those areas will be painted over this year. He reiterated the thermoplastic

did not hold up like it should have, and was not being used this year, noting there was no thermoplastic in the bid.

Mr. Ousley asked about a guarantee on the thermoplastic, and Mr. Barnett noted there was a one season guarantee, and it has put down three years ago.

Mr. Hanek moved this resolution to tonight's Council Agenda of June 10, 2019 as an emergency for three readings. Vote – 3 Ayes, 0 Nays.

GENERAL DISCUSSION:

Mrs. Rodriguez asked how the construction project was going on North Carpenter and Grafton,

To that, Mr. Barnett noted the project was on schedule; the plan was to switch to the next phase on Friday, June 14. He noted if anything holds up the project it would be the temporary traffic signal.

Mr. Barnett explained the entire Grafton Road intersection and 500 feet in each direction will be complete, except for driveway approaches and sidewalks. Once that intersection opens up the next phase will be North Carpenter South of Grafton Road for the remaining of the season. Mr. Barnett noted only southbound traffic will be maintained. He noted so far the project was on schedule.

ADJOURNMENT:

Being no further business, Mr. Hanek moved to adjourn at 6:18 p.m. Vote – 3 Ayes, 0 Nays.

Respectfully submitted,

Andrea Rodriguez
Chairwoman

BUILDING AND BUILDING CODE COMMITTEE

June 10, 2019

IN ATTENDANCE: Chairman Anthony Capretta, Committee Member Joseph Delsanter, Nicholas Hanek, Brian Ousley, Andrea Rodriguez, Patricia Hanek, Chief Building Official Cliff Calaway, City Manager/Safety Director Carl DeForest, Service Director Paul Barnett, Engineer Matt Jones, Law Director Kenneth Fisher, Council Clerk Fijabi Julien-Gallam, News Media.

The meeting convened at 6:00 p.m.

Mr. Delsanter moved to excuse Mr. Abella for just cause. Vote – 2 Ayes, 0 Nays.

BUILDING CODE UPDATE:

Mr. Calaway provided an update to the committee; the department issued more than 1,000 commercial and residential permits, there have been 31 foreclosures year to date, and there are a total of 453 registered rentals since instituting the ordinance. Additionally there were 90 high grass and weed inspections documented in the month of May.

Mr. Delsanter asked about grass cutting in property that is designated as woodlands he wanted to know what kind of issues arise from that when it abuts up to residential property.

Mr. Calaway indicated they do not get involved with the wooded areas.

Mr. Delsanter was looking for some guidelines; he noted there are dying trees in the woodlands, and he was contacted by a resident who was informed there was nothing the City can do.

Mr. Calaway indicated they can look at the property being affected, if trees are on utility lines or blocking swales the City can take a look at getting involved.

Mr. Ousley pointed out some of the older lots in the City were wooded, and there are also meadows, which cannot be cut.

Mr. Capretta pointed out there are some commercial lots that were in need of having grass cut; he will get with the City Manager on those areas.

GENERAL DISCUSSION:

Mr. Capretta was in receipt of lawn mowing ordinances from the cities of Medina, Middleburg Heights, and Strongsville. He will get copies to all of Council for their input and the committee will look at tweaking the current ordinance.

ADJOURNMENT:

Being no further business, Mr. Delsanter moved to adjourn at 6:07 p.m. Vote – 2 Ayes, 0 Nays.

Respectfully submitted,

Anthony P. Capretta

Anthony Capretta
Chairman

COMMITTEE OF THE WHOLE MEETING

June 10, 2019

IN ATTENDANCE: Vice Mayor Pro Tem Nicholas Hanek, Andrea Rodriguez, Anthony Capretta, Patricia Hanek, Brian Ousley, Joseph Delsanter, City Manager/Safety Director Carl DeForest, Law Director Kenneth Fisher, Engineer Matt Jones, Service Director Paul Barnett, Chief Building Official Cliff Calaway, Council Clerk Fijabi Julien-Gallam, News Media.

The meeting convened at 6:18 p.m.

Mr. Capretta moved to excuse Mr. Abella for just cause. Vote – 6 Ayes, 0 Nays.

REVIEW LEGISLATION:

ORD. NO. 37-19 – An emergency ordinance amending Chapter 1060 of the City of Brunswick Codified Ordinances

Mr. Barnett explained this legislation amends the codified ordinance on trash by adding carts and recyclables. The significant change is in section1060.06; hours for placing rubbish out for pickup. Currently April 1, through October 31 rubbish can be placed out no earlier than 6:00 p.m. the day before the regularly schedule pick up day, and November 1, through March 31, no earlier than 4:00 p.m. the day before the regularly schedule pick up. The administration has recommended changing the time to 4:00 p.m. to set out trash on the day before regularly schedule pickup throughout the year, additionally trash carts are to be taken off the street by 8:00 p.m. the day of the regular pick up day. He expressed the reason for this if for those residents that habitually leave their trash cans on the roadway year round 24 hours a day, and take trash to the cart. Anyone who violates these provisions is subject to a penalty of $150.00 per offense.

Mr. Barnett referenced the addition of Section 1060.06; Garbage, Rubbish, and Recyclable Rules and Regulations; which states the curbside garbage, rubbish and recyclable collection program will utilize carts provided by the City, no other containers will be permitted, the rules and regulations for this program shall be established from time to time by the Service Director. Mr. Barnett noted if rules needed to be modified or tweaked the administration would come to Council with the modifications.

Mrs. Hanek pointed out section1060.06 addressed hours for placing out trash, she asked if what Mr. Barnett just cited should be section 1060.07, Mr. Barnett advised he would make that correction.

Mr. Delsanter asked about the schedule for cart delivery; he heard they were not coming out until July.

Mr. Barnett clarified, the start date for delivery of carts is Monday, June 24, the contractor will start delivery with Monday trash collection; they have a system to the delivery of the carts, and it will take three to four weeks to deliver all of them.

Mr. Ousley asked what residents should do when they are delivered the 96 gallon cart, and they want a 64 gallon cart.

It was noted by Mr. Barnett, the resident can call Republic Services to have the carts changed out.

Also, Mr. Ousley did not think someone should be charged for a recycle cart if they were not going to use it. To that Mr. Barnett stated everyone was being charged the same rate, and Mr. Ousley thought it should be cheaper for those not using a recycle cart.

In response to that Mr. Barnett noted most people think recycling is the appropriate thing to do and in most communities that offer different rates, residents that recycle are given a lower rate, so Mr. Barnett stated it can be looked at two different ways.

Mr. Barnett distributed informational handouts to the committee which will be attached to every trash cart; it has important information and important phone numbers.

The administration is prepared for an enormous amount of phone calls starting June 24. Mr. Barnett noted this is a change and it will be very difficult in the beginning.

Mrs. Hanek moved this ordinance to tonight's Council Agenda of June 10, 2019 as an emergency for three readings, with the amendment to the numeration of section 1060.07 instead of reading 1060.06. Vote – 6 Ayes, 0 Nays.

GENERAL DISCUSSION:

With everything going on within the community, Mr. Ousley suggested Council go back to taking a bus trip throughout the City with BZA, and Planning Commission.

Mr. Barnett advised the administration put in for a $200,000 recycle cart grant and the City received it. The grant information came in from Ohio EPA today and the deadline to have the contract signed is June 17. Mr. Barnett advised the contract states the City has to have a 25% match to get the $200,000 grant. It was noted by Mr. Barnett $400,000 was budgeted for the carts up front. The intent of the administration is for the City Manager to ratify the contract by legislation.

Mr. Delsanter asked since being the recipient of the $200,000 grant if it would lower the expectation of what the residents are going to be charged, and Mr. Barnett replied in the negative; he noted with the expectation of the City obtaining the grant, it was built into the quarterly rate.

EXECUTIVE SESSION:

Mrs. Hanek moved to go into Executive Session to discuss the employment, appointment, and compensation of a public employee, seconded by Mr. Ousley. Roll Call – Ayes – 6, Mr. Hanek, Mrs. Rodriguez, Mr. Capretta, Mr. Delsanter, Mrs. Hanek, Mr. Ousley. Nays – 0. Motion Carried.

Mr. Delsanter moved to adjourn out of Executive Session, seconded by Mrs. Hanek. Roll Call – Ayes – 6, Mrs. Hanek, Mr. Delsanter, Mr. Ousley, Mr. Hanek, Mr. Capretta, Mrs. Rodriguez. Nays – 0. Motion Carried.

ADJOURNMENT:

Being no further business, Mr. Delsanter moved to adjourn the Committee of the Whole Meeting at 7:34 p.m. Vote – 6 Ayes, 0 Nays.

Respectfully submitted,

Valerie Zak

Valerie Zak
Assistant Clerk of Council

THE CITY OF BRUNSWICK

PROPOSED LEGISLATION

DATE: 6/24/2019

TO: Vice Mayor Michael Abella Jr. and Members of City Council

FROM: Carl S. DeForest, City Manager
Paul Barnett

COPY: Mayor Ron Falconi

LEGISLATION: **ORD. NO. 37-19** - An emergency ordinance amending Chapter 1060 of the City of Brunswick Codified Ordinances. - **2nd Reading** (Committee-of-the-Whole, *Administration/Paul Barnett*)

BACKGROUND: City Council approved a change from manual trash collection to a semi-automated trash and recycle curbside collection using City provided carts. Due to the changes in process, the existing Codified Ordinances will be out of date when the new program is initiated. The new process will begin on July 1, 2019 and will take up to 3 weeks to be fully implemented.

PURPOSE AND EXPLANATION: The exiting Codified Ordinances are intended to be for the existing manual curbside trash collection. With a new semi-automated curbside trash and recycle program using City provided carts, the Codified Ordinances are in need of updating

IMPLEMENTATION SCHEDULE: 3rd reading on July 8, 2019 and adopted as an emergency.

FINANCIAL INFORMATION:

FINANCIAL SUMMARY:

RECOMMENDED ACTION:

One Reading	No
Two Readings	No
Three Readings	Yes
Emergency	Yes
Suspension of Rules	No

If emergency or suspension of the rules, why the request?
Emergency is requested in order to assure the revised Codified Ordinances are in place once the new program is fully implemented in mid July 2019.

ADDITIONAL INFORMATION:

CITY OF BRUNSWICK, OHIO
ORDINANCE NO. _____

BY:

AN EMERGENCY ORDINANCE AMENDING CHAPER 1060 OF THE CITY OF BRUNSWICK CODIFIED ORDINANCES.

WHEREAS: THE COUNCIL OF THE CITY OF BRUNSWICK HEREBY ORDAINS:

SECTION 1: That Chapter 1060 of the Codified Ordinances is hereby amended to read as follows:

"**1060.01 ACCUMULATIONS OF GARBAGE, ~~AND~~ RUBBISH AND RECYCLABLES.**

No person shall accumulate garbage, ~~or~~ rubbish or recyclables on private property for a longer period than that covered by the weekly pickup periods of the contract hauler.

1060.02 CONTRACT OR PERMIT REQUEST.

(a) No person shall collect garbage, ~~or~~ rubbish or recyclables within the City without first obtaining a valid permit or entering into a valid contract with the City as provided for in these ordinances or the resolutions of the City.

(b) A permit may be issued by the Director of Public Service, without fee, under either of the following conditions:

(1) For hauling of rubbish, bulk rubbish, ~~or~~ construction waste or recyclables only from the premises of the permittee for a twenty-four hour period.

(2) For the removal of specifically enumerated items that were previously discarded as rubbish, bulk rubbish, ~~or~~ construction waste or recyclables provided the permittee can produce written permission from the owner of said ~~waste~~ materials indicating transference of the property to the permittee, fully describing said items to be removed, and assurance that said removal will not create conditions that are hazardous to the public. The permit shall be valid for only a twenty-four hour period and must include a description of items to be removed.

(c) Notwithstanding any other provision of these Codified Ordinances, the hours of garbage, ~~or~~ rubbish or recyclables collection with the City of Brunswick shall be between the hours of 7:00 a.m. and 7:00 p.m., Monday through Saturday, except as such hours may be extended by the City Manager.

1060.03 SERVICE CHARGES.

(a) ~~(1)~~ Residences. There shall be a monthly charge to each householder for the weekly collection, transportation and disposal of residential solid waste, ~~and~~ yard waste and recyclables. The monthly charge shall include each resident's pro rata share of the contract hauler's current

charge to the City under the contract and a service charge for billing, collecting and managing the monthly charge. The monthly charge shall be billed quarterly in advance. A penalty of eighteen percent (18%) shall be charged on all accounts delinquent in excess of ten days after the expiration of the billing period.

~~(2) Grass Clippings. Effective April 1, 2004 tags required for pickup of bags/containers of grass clippings will be provided without a fee. Effective May 1, 2005 tags will not be required for pickup of grass clippings.~~

(b) Billing. The City, through the office of the Director of Finance, shall make the billing charges and collections set forth in subsection (a) hereof.

(c) Notice. Notice of any hearing pertaining to rates for services rendered under this chapter shall be given to all interested persons at least seven days before the date set for such hearing. The kind of notice, the place of hearing and all facts connected with or relating to such hearing shall be regulated by Council.

(d) Financial Reports. A financial statement of profit and loss shall be filed with the Director of Public Service by contract haulers for each calendar year, within ninety days after the close of such year.

(e) Delinquent Accounts. The previous balance of delinquent amounts shall be shown once each year on the July billing and shall be stamped~~, in red,~~ "FINAL NOTICE." If payment is not received within thirty days, the Director of Finance shall make a written return to the County Auditor and such amounts, when allowed, shall be entered upon the tax duplicate, shall be a lien upon the land from the date of entry and shall be collected as other taxes and returned to the City with the General Fund.

1060.04 UNCOLLECTED GARBAGE, ~~AND~~ RUBBISH AND RECYCLABLES.

Fermenting, putrefying or odoriferous garbage in containers or dumped in the open is hereby declared to be a nuisance. Rubbish or recyclables stored in receptacles or containers or in piles on premises in possession of the party responsible therefor for a period exceeding thirty days is also declared to be a nuisance. Such nuisances are prohibited, and the person responsible for either or both of them shall be subject to the penalty provided in Section 1060.99.

1060.05 WAIVER OF CHARGES.

Effective July 1, 2011, any homeowner, in the City, that has been granted a Homestead Exemption as of January 1, 2007, as certified by the County Auditor, shall be exempt from the regular garbage and rubbish service collection charges except for a charge of eleven dollars and thirty-five cents ($11.35) per month. Any homeowner in the City who has not previously obtained a Homestead Exemption as of January 1, 2007, shall be charged a monthly rate as provided in Section 1060.03.

1060.06 HOURS FOR PLACING GARBAGE, ~~AND~~ RUBBISH AND RECYCLABLES OUT FOR PICK-UP.

~~(a) April 1st through October 31st. No earlier than 6:00 p.m. the day before regularly~~

~~scheduled pick-up day.~~

~~(b) November 1st through March 31st. No earlier than 4:00 p.m. the day before your regularly scheduled pick-up day.~~

Garbage, rubbish and recyclables are to be set out no earlier than 4:00 p.m. the day before the regularly scheduled pick-up date. All carts are to be removed from the right-of-way no later than 8:00 p.m. the day of the regularly scheduled pick-up date.

1060.06 GARBAGE, RUBBISH AND RECYCLABLE RULES AND REGULATIONS.

The curbside garbage, rubbish and recyclable collection program will utilize carts provided by the City. No other containers will be permitted. The rules and regulations for the program shall be as established, from time to time, by the Service Director.

1060.99 PENALTY.

Whoever violates or fails to comply with any of the provisions of this chapter or the rules and regulations as established by the Service Director is guilty of a minor misdemeanor and shall be fined not more than one hundred and fifty dollars ($15~~0~~0.00) per offense. A separate offense shall be deemed committed each day during or on which a violation or noncompliance occurs or continues."

SECTION 2: That this Ordinance is declared to be an emergency measure necessary for the immediate preservation of the public peace, property, health, welfare and safety of the City and for the additional reason to be effective as of the July 9, 2019 anticipated delivery date of the garbage/recycling carts. Therefore, the same shall be in full force and effect from and after its passage by the required number of votes.

PASSED: 1st Reading_____

2nd Reading_____

3rd Reading_____

ADOPTED: _____ AYES _____ NAYS _____

ATTEST: _____
Clerk of Council
Fijabi Julien-Gallam, CMC

CITY OF BRUNSWICK, OHIO
ORDINANCE NO. 37-19

BY: Committee-of-the-Whole

AN EMERGENCY ORDINANCE AMENDING CHAPER 1060 OF THE CITY OF BRUNSWICK CODIFIED ORDINANCES.

WHEREAS: THE COUNCIL OF THE CITY OF BRUNSWICK HEREBY ORDAINS:

SECTION 1: That Chapter 1060 of the Codified Ordinances is hereby amended to read as follows:

"**1060.01 ACCUMULATIONS OF GARBAGE, ~~AND~~ RUBBISH AND RECYCLABLES.**

No person shall accumulate garbage, ~~or~~ rubbish or recyclables on private property for a longer period than that covered by the weekly pickup periods of the contract hauler.

1060.02 CONTRACT OR PERMIT REQUEST.

(a) No person shall collect garbage, ~~or~~ rubbish or recyclables within the City without first obtaining a valid permit or entering into a valid contract with the City as provided for in these ordinances or the resolutions of the City.

(b) A permit may be issued by the Director of Public Service, without fee, under either of the following conditions:

(1) For hauling of rubbish, bulk rubbish, ~~or~~ construction waste or recyclables only from the premises of the permittee for a twenty-four hour period.

(2) For the removal of specifically enumerated items that were previously discarded as rubbish, bulk rubbish, ~~or~~ construction waste or recyclables provided the permittee can produce written permission from the owner of said ~~waste~~ materials indicating transference of the property to the permittee, fully describing said items to be removed, and assurance that said removal will not create conditions that are hazardous to the public. The permit shall be valid for only a twenty-four hour period and must include a description of items to be removed.

(c) Notwithstanding any other provision of these Codified Ordinances, the hours of garbage, ~~or~~ rubbish or recyclables collection with the City of Brunswick shall be between the hours of 7:00 a.m. and 7:00 p.m., Monday through Saturday, except as such hours may be extended by the City Manager.

1060.03 SERVICE CHARGES.

(a) ~~(1)~~ Residences. There shall be a monthly charge to each householder for the weekly collection, transportation and disposal of residential solid waste, ~~and~~ yard waste and recyclables. The monthly charge shall include each resident's pro rata share of the contract hauler's current

charge to the City under the contract and a service charge for billing, collecting and managing the monthly charge. The monthly charge shall be billed quarterly in advance. A penalty of eighteen percent (18%) shall be charged on all accounts delinquent in excess of ten days after the expiration of the billing period.

~~(2) Grass Clippings. Effective April 1, 2004 tags required for pickup of bags/containers of grass clippings will be provided without a fee. Effective May 1, 2005 tags will not be required for pickup of grass clippings.~~

(b) Billing. The City, through the office of the Director of Finance, shall make the billing charges and collections set forth in subsection (a) hereof.

(c) Notice. Notice of any hearing pertaining to rates for services rendered under this chapter shall be given to all interested persons at least seven days before the date set for such hearing. The kind of notice, the place of hearing and all facts connected with or relating to such hearing shall be regulated by Council.

(d) Financial Reports. A financial statement of profit and loss shall be filed with the Director of Public Service by contract haulers for each calendar year, within ninety days after the close of such year.

(e) Delinquent Accounts. The previous balance of delinquent amounts shall be shown once each year on the July billing and shall be stamped~~, in red,~~ "FINAL NOTICE." If payment is not received within thirty days, the Director of Finance shall make a written return to the County Auditor and such amounts, when allowed, shall be entered upon the tax duplicate, shall be a lien upon the land from the date of entry and shall be collected as other taxes and returned to the City with the General Fund.

1060.04 UNCOLLECTED GARBAGE, ~~AND~~ RUBBISH AND RECYCLABLES.

Fermenting, putrefying or odoriferous garbage in containers or dumped in the open is hereby declared to be a nuisance. Rubbish or recyclables stored in receptacles or containers or in piles on premises in possession of the party responsible therefor for a period exceeding thirty days is also declared to be a nuisance. Such nuisances are prohibited, and the person responsible for either or both of them shall be subject to the penalty provided in Section 1060.99.

1060.05 WAIVER OF CHARGES.

Effective July 1, 2011, any homeowner, in the City, that has been granted a Homestead Exemption as of January 1, 2007, as certified by the County Auditor, shall be exempt from the regular garbage and rubbish service collection charges except for a charge of eleven dollars and thirty-five cents ($11.35) per month. Any homeowner in the City who has not previously obtained a Homestead Exemption as of January 1, 2007, shall be charged a monthly rate as provided in Section 1060.03.

1060.06 HOURS FOR PLACING GARBAGE, ~~AND~~ RUBBISH AND RECYCLABLES OUT FOR PICK-UP.

~~(a) April 1st through October 31st. No earlier than 6:00 p.m. the day before regularly~~

~~scheduled pick-up day.~~

~~(b) November 1st through March 31st. No earlier than 4:00 p.m. the day before your regularly scheduled pick-up day.~~

Garbage, rubbish and recyclables are to be set out no earlier than 4:00 p.m. the day before the regularly scheduled pick-up date. All carts are to be removed from the right-of-way no later than 8:00 p.m. the day of the regularly scheduled pick-up date.

1060.06 GARBAGE, RUBBISH AND RECYCLABLE RULES AND REGULATIONS.

The curbside garbage, rubbish and recyclable collection program will utilize carts provided by the City. No other containers will be permitted. The rules and regulations for the program shall be as established, from time to time, by the Service Director.

1060.99 PENALTY.

Whoever violates or fails to comply with any of the provisions of this chapter or the rules and regulations as established by the Service Director is guilty of a minor misdemeanor and shall be fined not more than one hundred and fifty dollars ($15~~0~~0.00) per offense. A separate offense shall be deemed committed each day during or on which a violation or noncompliance occurs or continues."

SECTION 2: That this Ordinance is declared to be an emergency measure necessary for the immediate preservation of the public peace, property, health, welfare and safety of the City and for the additional reason to be effective as of the July 9, 2019 anticipated delivery date of the garbage/recycling carts. Therefore, the same shall be in full force and effect from and after its passage by the required number of votes.

PASSED: 1st Reading_____

2nd Reading_____

3rd Reading_____

ADOPTED: _____ AYES _____ NAYS _____

ATTEST: _____
Clerk of Council
Fijabi Julien-Gallam, CMC

THE CITY OF BRUNSWICK

PROPOSED LEGISLATION

DATE: 6/24/2019

TO: Vice Mayor Michael Abella Jr. and Members of City Council

FROM: Carl S. DeForest, City Manager
Paul Barnett

COPY: Mayor Ron Falconi

LEGISLATION: **RES. NO. 38-19** - An emergency resolution authorizing the City Manager to enter into a three (3) year agreement with Zimmerman Paint Contractors, CO. for the provision of pavement marking services. - **2nd Reading** (Services, Utilities, Technology & Cable Committee, *Administration/Paul Barnett*)

BACKGROUND: City Council previously approved a motion to advertise for bids for pavement marking. The City requested bids for traditional traffic paint pavement striping for City streets. Included in each year's bid is a price to perform optional pavement markings in City owned parking lots. These are optional and are included in the award for years 2 and 3. There will be no parking lot striping done in 2019.

PURPOSE AND EXPLANATION: Bids were opened on May 28, 2019 from two (2) bidders. Zimmerman Paint was the lowest and best bidder at $63,328.32 for the first year; $67,470.10 for the second year and $72,016.70 for the third year. Staff has adjusted the scope of the work for the first year of the contract (2019) to non-perform a portion of the pavement marking on North Carpenter and Laurel Road that will be under construction in 2019. The scope was also adjusted to non-perform the optional city parking lot striping for the first year of the contract (2019). As a result, the first year of the contract will be $52,237.39.

IMPLEMENTATION SCHEDULE: 3rd reading on July 8, 2019 and adopted as an emergency.

FINANCIAL INFORMATION: Pavement marking services - - - - -

FINANCIAL SUMMARY: **2019**-$52,237.39 Account 117-0420-54259(Roadway)

The first year of the contract is not to exceed the $52,237.39 amount shown on the "2019 Pavement Marking Quantities and Costs from Low Bid" document, as adjusted from the low bid amount of $63,328.32 due to adjustments to the scope of the work.

Years two and three of the contract are not to exceed the low bid amounts of $67,470.10 and $72,016.70 respectively and are contingent upon future appropriations adopted by Council. If

sufficient appropriations are adopted by City Council in subsequent years, it is likely the fund/account breakdown will be as follows:

2020-$62,020.10 Account 117-0420-54259(Roadway)
$ 500.00 Account 123-0460-54243(BAT)
$ 750.00 Account (City Hall) (Todd, please provide acct. code)
$ 2,200.00 Account 127-0810-54273 (Neura Park)
$ 2,000.00 Account 131-0830-54236 (Recreation Center)

2021-$66,566.70 Account 117-0420-54259(Roadway)
$ 500.00 Account 123-0460-54243(BAT)
$ 750.00 Account (City Hall) (Todd, please provide
$ 2,200.00 Account 127-0810-54273(Neura Park)
$ 2,000.00 Account 131-0830-54236(Recreation Center)

RECOMMENDED ACTION:

One Reading	No
Two Readings	No
Three Readings	Yes
Emergency	Yes
Suspension of Rules	No

If emergency or suspension of the rules, why the request?
Emergency is requested in order to assure the roadway stripping can be completed in 2019.

ADDITIONAL INFORMATION:

Pavement Marking Bids Tabulations 5/28/2019 at Noon

Bid for First Year of Contract-2019						Bid Tabs			
						Bid Bond	Yes	Bid Bond	Yes
All Markings to be As Per ODOT #406-10 (White) & #406-55 (Yellow) or Approved Equal						Zimmerman		A&A Safety	
Description-All ITEM 642	Estimated Quantity	Units	2018 Bid	5% Increase for 2019	Estimated Cost	Bid	Cost	Bid	Cost
Edge Line, 4" Type 1 Solid, White	6.34	Miles	$430.00	$451.50	$2,862.51	$500.00	$3,170.00	$600.00	$3,804.00
Lane Line, 4" Type 1 Broken, White	6.12	Miles	$310.00	$325.50	$1,992.06	$375.00	$2,295.00	$540.00	$3,304.80
Center Line, Type 1	27.59	Miles	$560.00	$588.00	$16,222.92	$610.00	$16,829.90	$700.00	$19,313.00
Channelization Line, 8", Type 1	13,477.00	Foot	$0.36	$0.38	$5,094.31	$0.36	$4,851.72	$0.45	$6,064.65
Stop Line, Type 1	3,597.00	Foot	$1.20	$1.26	$4,532.22	$1.20	$4,316.40	$1.25	$4,496.25
Crosswalk Line, Type 1	20,205.00	Foot	$0.46	$0.48	$9,759.02	$0.46	$9,294.30	$0.65	$13,133.25
Transverse/Diagonal Line, Type 1	3,344.00	Foot	$1.25	$1.31	$4,389.00	$1.25	$4,180.00	$1.15	$3,845.60
Lane Arrow, Type 1	316.00	Each	$25.00	$26.25	$8,295.00	$25.00	$7,900.00	$45.00	$14,220.00
School Symbol Marking, Type 1	27.00	Each	$120.00	$126.00	$3,402.00	$120.00	$3,240.00	$250.00	$6,750.00
Word on Pavement, Type 1	34.00	Each	$37.00	$38.85	$1,320.90	$37.00	$1,258.00	$55.00	$1,870.00
Island Marking, Type 1	181.00	Sq. Ft.	$3.00	$3.15	$570.15	$3.00	$543.00	$1.15	$208.15
				Total	**$58,440.08**		**$57,878.32**		**$77,009.70**
Optional Facility Pavement Markings									
BAT TV Parking Lot	1.00	Lump	$450.00	$472.50	$472.50	$500.00	$500.00	$2,000.00	$2,000.00
City Hall Parking Lot	1.00	Lump	$700.00	$735.00	$735.00	$750.00	$750.00	$2,500.00	$2,500.00
Neura Park Parking Lot	1.00	Lump	$600.00	$630.00	$630.00	$2,200.00	$2,200.00	$2,500.00	$2,500.00
Recreation Center Parking Lot	1.00	Lump	$1,800.00	$1,890.00	$1,890.00	$2,000.00	$2,000.00	$500.00	$500.00

Bid for Second Year of Contract-2020						Bid Tabs			
All Markings to be As Per ODOT #406-10 (White) & #406-55 (Yellow) or Approved Equal						Zimmerman		A&A Safety	
Description-All ITEM 642	Estimated Quantity	Units	2018 Bid	7% Increase for 2019	Estimated Cost	Bid	Cost	Bid	Cost
Edge Line, 4" Type 1 Solid, White	6.34	Miles	$430.00	$460.10	$2,917.03	$525.00	$3,328.50	$750.00	$4,755.00
Lane Line, 4" Type 1 Broken, White	6.12	Miles	$310.00	$331.70	$2,030.00	$400.00	$2,448.00	$675.00	$4,131.00
Center Line, Type 1	27.59	Miles	$560.00	$599.20	$16,531.93	$615.00	$16,967.85	$875.00	$24,141.25
Channelization Line, 8", Type 1	13,477.00	Foot	$0.36	$0.39	$5,191.34	$0.40	$5,390.80	$0.55	$7,412.35
Stop Line, Type 1	3,597.00	Foot	$1.20	$1.28	$4,618.55	$1.25	$4,496.25	$1.55	$5,575.35
Crosswalk Line, Type 1	20,205.00	Foot	$0.46	$0.49	$9,944.90	$0.50	$10,102.50	$0.80	$16,164.00
Transverse/Diagonal Line, Type 1	3,344.00	Foot	$1.25	$1.34	$4,472.60	$1.30	$4,347.20	$1.45	$4,848.80
Lane Arrow, Type 1	316.00	Each	$25.00	$26.75	$8,453.00	$30.00	$9,480.00	$55.00	$17,380.00
School Symbol Marking, Type 1	27.00	Each	$120.00	$128.40	$3,466.80	$125.00	$3,375.00	$310.00	$8,370.00
Word on Pavement, Type 1	34.00	Each	$37.00	$39.59	$1,346.06	$40.00	$1,360.00	$70.00	$2,380.00
Island Marking, Type 1	181.00	Sq. Ft.	$3.00	$3.21	$581.01	$4.00	$724.00	$1.45	$262.45
				Total	**$59,553.23**		**$62,020.10**		**$95,420.20**

Optional Facility Pavement Markings									
BAT TV Parking Lot	1.00	Lump	$450.00	$481.50	$481.50	$500.00	$500.00	$2,500.00	$2,500.00
City Hall Parking Lot	1.00	Lump	$700.00	$749.00	$749.00	$750.00	$750.00	$3,125.00	$3,125.00
Neura Park Parking Lot	1.00	Lump	$600.00	$642.00	$642.00	$2,200.00	$2,200.00	$3,125.00	$3,125.00
Recreation Center Parking Lot	1.00	Lump	$1,800.00	$1,926.00	$1,926.00	$2,000.00	$2,000.00	$625.00	$625.00

Bid for Third Year of Contract-2021						**Bid Tabs**			
All Markings to be As Per ODOT #406-10 (White) & #406-55 (Yellow) or Approved Equal						**Zimmerman**		**A&A Safety**	
Description-All ITEM 642	Estimated Quantity	Units	2018 Bid	9% Increase for 2019	Estimated Cost	Bid	Cost	Bid	Cost
Edge Line, 4" Type 1 Solid, White	6.34	Miles	$430.00	$468.70	$2,971.56	$550.00	$3,487.00	$940.00	$5,959.60
Lane Line, 4" Type 1 Broken, White	6.12	Miles	$310.00	$337.90	$2,067.95	$425.00	$2,601.00	$845.00	$5,171.40
Center Line, Type 1	27.59	Miles	$560.00	$610.40	$16,840.94	$620.00	$17,105.80	$1,095.00	$30,211.05
Channelization Line, 8", Type 1	13,477.00	Foot	$0.36	$0.39	$5,288.37	$0.45	$6,064.65	$0.70	$9,433.90
Stop Line, Type 1	3,597.00	Foot	$1.20	$1.31	$4,704.88	$1.30	$4,676.10	$1.95	$7,014.15
Crosswalk Line, Type 1	20,205.00	Foot	$0.46	$0.50	$10,130.79	$0.55	$11,112.75	$1.00	$20,205.00
Transverse/Diagonal Line, Type 1	3,344.00	Foot	$1.25	$1.36	$4,556.20	$1.35	$4,514.40	$1.80	$6,019.20
Lane Arrow, Type 1	316.00	Each	$25.00	$27.25	$8,611.00	$35.00	$11,060.00	$70.00	$22,120.00
School Symbol Marking, Type 1	27.00	Each	$120.00	$130.80	$3,531.60	$130.00	$3,510.00	$390.00	$10,530.00
Word on Pavement, Type 1	34.00	Each	$37.00	$40.33	$1,371.22	$45.00	$1,530.00	$90.00	$3,060.00
Island Marking, Type 1	181.00	Sq. Ft.	$3.00	$3.27	$591.87	$5.00	$905.00	$1.80	$325.80
				Total	**$60,666.37**		**$66,566.70**		**$120,050.10**
Optional Facility Pavement Markings									
BAT TV Parking Lot	1.00	Lump	$450.00	$490.50	$490.50	$500.00	$500.00	$3,125.00	$3,125.00
City Hall Parking Lot	1.00	Lump	$700.00	$763.00	$763.00	$750.00	$750.00	$3,910.00	$3,910.00
Neura Park Parking Lot	1.00	Lump	$600.00	$654.00	$654.00	$2,200.00	$2,200.00	$3,910.00	$3,910.00
Recreation Center Parking Lot	1.00	Lump	$1,800.00	$1,962.00	$1,962.00	$2,000.00	$2,000.00	$785.00	$785.00

Bid Synopsis		**Bid Tabs**			
		Bid Bond	**Yes**	**Bid Bond**	**Yes**
		Zimmerman		**A&A Safety**	
	Estimated Cost		**Cost**		**Cost**
First year, 2019 Roadway Markings	$58,440.08		$57,878.32		$77,009.70
Optional Facilities	$3,727.50		$5,450.00		$7,500.00
Total Cost	$62,167.58		$63,328.32		$84,509.70
Second Year, 2020 Roadway Markings	$59,553.23		$62,020.10		$95,420.20
Optional Facilities	$3,798.50		$5,450.00		$9,375.00
Total Cost	$63,351.73		$67,470.10		$104,795.20
Third Year, 2021 Roadway Markings	$60,666.37		$66,566.70		$120,050.10
Optional Facilities	$3,869.50		$5,450.00		$11,730.00
Total Cost	$64,535.87		$72,016.70		$131,780.10
Three Year Total Roadway Markings	$178,659.68		$186,465.12		$292,480.00
Three Year Total Optional Facilities	$11,395.50		$16,350.00		$28,605.00
Three Year Total Cost	$190,055.18		$202,815.12		$321,085.00

CITY OF BRUNSWICK, OHIO
RESOLUTION NO. 38-19

BY: Mrs. Rodriguez, Mr. Capretta, and Mr. Hanek

AN EMERGENCY RESOLUTION AUTHORIZING THE CITY MANAGER TO ENTER INTO A THREE (3) YEAR AGREEMENT WITH ZIMMERMAN PAINT CONTRACTORS, CO. FOR THE PROVISION OF PAVEMENT MARKING SERVICES.

WHEREAS: The City of Brunswick received two (2) bids for the Pavement Marking Program (the "Program"), in accordance with public bidding requirements; and

WHEREAS: The two (2) received public bids were opened on May 28, 2019, with Zimmerman Paint Contractors, Co. determined to be the lowest and best bidder.

WHEREAS: THE COUNCIL OF THE CITY OF BRUNSWICK HEREBY RESOLVES:

SECTION 1: That the City Manager, with the approval of the Law Director, is hereby authorized and directed to enter into a three (3) year Agreement with Zimmerman Paint Contractors, Co., the lowest and best bidder, for the Pavement Marking Program in an amount not exceed the submitted bid amounts for each respective year of the Program.

SECTION 2: That this Resolution is hereby declared to be an emergency measure necessary for the immediate preservation of the public peace, property, health, safety or welfare, and for the additional reason that immediate passage is necessary for completion of the first year of the Program during the 2019 construction season. Therefore, the same shall be in full force and effect from and after its passage by the required number of votes or from the earliest time allowed by law.

PASSED: 1st Reading_____

2nd Reading_____

3rd Reading_____

ADOPTED: _____ AYES _____ NAYS _____

ATTEST: _____
Clerk of Council
Fijabi Julien-Gallam, CMC

THE CITY OF BRUNSWICK

PROPOSED LEGISLATION

DATE: 6/24/2019

TO: Vice Mayor Michael Abella Jr. and Members of City Council

FROM: Carl S. DeForest, City Manager
Nicholas Hanek

COPY: Mayor Ron Falconi

LEGISLATION: **ORD. NO. 39-19** - An emergency ordinance extending a temporary moratorium on the acceptance and processing of applications for zoning, occupancy and/or building permit approvals for warehousing and motor freight garages and truck or transfer terminal uses in the I-L Light Industrial district and the issuance of such approvals. - **1st Reading** (To be brought from Committee-of-the-Whole, *Administration/Nicholas Hanek*)

BACKGROUND: On July 23, 2018, this Council adopted Ordinance No. 60-18, which established a six (6) month temporary moratorium on the acceptance and processing of applications for zoning, occupancy and/or building permit approvals for warehousing and motor freight garages and truck or transfer terminal uses in the I-L Light Industrial District in the City, which temporary moratorium is set to expire on January 23, 2019.

PURPOSE AND EXPLANATION: This Council believes that extending the temporary moratorium on the acceptance and processing of applications for zoning, occupancy and/or building permit approvals for warehousing and motor freight garages and truck or transfer terminal uses in the I-L Light Industrial District in the City, and on the issuance of such approvals, will not deny property owners economically viable use of their property and will permit the City Administration, Council and Planning Commission necessary time to undertake a review of the Brunswick Zoning Code and possible amendment thereof.

IMPLEMENTATION SCHEDULE:

FINANCIAL INFORMATION:

FINANCIAL SUMMARY:

RECOMMENDED ACTION:

One Reading	No
Two Readings	No
Three Readings	Yes

Emergency	Yes
Suspension of Rules	No

If emergency or suspension of the rules, why the request?
Requesting that this be an emergency to meet the timeline.

ADDITIONAL INFORMATION:

CITY OF BRUNSWICK, OHIO
ORDINANCE NO._____

BY:

AN EMERGENCY ORDINANCE EXTENDING A TEMPORARY MORATORIUM ON THE ACCEPTANCE AND PROCESSING OF APPLICATIONS FOR ZONING, OCCUPANCY AND/OR BUILDING PERMIT APPROVALS FOR WAREHOUSING AND MOTOR FREIGHT GARAGES AND TRUCK OR TRANSFER TERMINAL USES IN THE I-L LIGHT INDUSTRIAL DISTRICT AND THE ISSUANCE OF SUCH APPROVALS.

WHEREAS: On July 23, 2018, City Council adopted Ordinance No. 60-18, which established a six (6) month temporary moratorium on the acceptance and processing of applications for zoning, occupancy and/or building permit approvals for warehousing and motor freight garages and truck or transfer terminal uses in the I-L Light Industrial District in the City, which temporary moratorium is set to expire on January 23, 2019;

WHEREAS: On January 14, 2019, City Council adopted Ordinance No. 103-18 extending the temporary moratorium on the acceptance and processing of applications for zoning, occupancy and/or building permit approvals for warehousing and motor freight garages and truck or transfer terminal uses in the I-L Light Industrial District in the City for an additional six (6) months up to and including July 23, 2019;

WHEREAS: The City of Brunswick may legitimately regulate the location and approval of warehousing and motor freight garages and truck or transfer terminals, which are principally permitted uses in the I-L Light Industrial District per Codified Ordinance Section 1266.02(b) and (i), respectively; and

WHEREAS: This Council believes that extending the temporary moratorium on the acceptance and processing of applications for zoning, occupancy and/or building permit approvals for warehousing and motor freight garages and truck or transfer terminal uses in the I-L Light Industrial District in the City, and on the issuance of such approvals, will not deny property owners economically viable use of their property and will permit the City Administration, Council and Planning Commission necessary time to undertake a review of the Brunswick Zoning Code and possible amendment thereof.

WHEREAS: THE COUNCIL OF THE CITY OF BRUNSWICK HEREBY ORDAINS:

SECTION 1: The six (6) month temporary moratorium extension established by Ordinance No. 103-18 shall be extended for a period of six (6) months up to and including

January 23, 2020, wherein the City shall not accept or process any applications for zoning, occupancy and/or building permit approvals for warehousing and motor freight garages and truck or transfer terminal uses in the I-L Light Industrial District in the City, and further shall not issue any such approvals during said period.

SECTION 2: Whenever the provisions of this Ordinance conflict with any other Ordinance or
any provision of the Codified Ordinances of the City, the provisions of this Ordinance shall control.

SECTION 3: It is found and determined that all formal actions of this Council concerning and relating to the adoption of this Ordinance were adopted in an open meeting of this Council, and that all deliberations of this Council and any of its committees that resulted in such formal action, were in meetings open to the public, in compliance with all legal requirements, including Section 121.22 of the Ohio Revised Code.

SECTION 4: This Ordinance is hereby declared to be an emergency measure necessary for the immediate preservation of the public health, safety and general welfare of the City and its residents and property owners and for the additional reason that it is required to permit the City Administration, Council and Planning Commission necessary time to undertake a review of the Brunswick Zoning Code and possible amendment thereof. Therefore, the same shall be in full force and effect from and after its passage by the required number of votes or from the earliest time allowed by law.

PASSED: 1st Reading_____

2nd Reading_____

3rd Reading_____

ADOPTED: _____ AYES _____ NAYS _____

ATTEST: _____
Clerk of Council
Fijabi Julien-Gallam, CMC

CITY OF BRUNSWICK, OHIO
ORDINANCE NO. 39-19

BY: Committee-of-the-Whole

AN EMERGENCY ORDINANCE EXTENDING A TEMPORARY MORATORIUM ON THE ACCEPTANCE AND PROCESSING OF APPLICATIONS FOR ZONING, OCCUPANCY AND/OR BUILDING PERMIT APPROVALS FOR WAREHOUSING AND MOTOR FREIGHT GARAGES AND TRUCK OR TRANSFER TERMINAL USES IN THE I-L LIGHT INDUSTRIAL DISTRICT AND THE ISSUANCE OF SUCH APPROVALS.

WHEREAS: On July 23, 2018, City Council adopted Ordinance No. 60-18, which established a six (6) month temporary moratorium on the acceptance and processing of applications for zoning, occupancy and/or building permit approvals for warehousing and motor freight garages and truck or transfer terminal uses in the I-L Light Industrial District in the City, which temporary moratorium is set to expire on January 23, 2019;

WHEREAS: On January 14, 2019, City Council adopted Ordinance No. 103-18 extending the temporary moratorium on the acceptance and processing of applications for zoning, occupancy and/or building permit approvals for warehousing and motor freight garages and truck or transfer terminal uses in the I-L Light Industrial District in the City for an additional six (6) months up to and including July 23, 2019;

WHEREAS: The City of Brunswick may legitimately regulate the location and approval of warehousing and motor freight garages and truck or transfer terminals, which are principally permitted uses in the I-L Light Industrial District per Codified Ordinance Section 1266.02(b) and (i), respectively; and

WHEREAS: This Council believes that extending the temporary moratorium on the acceptance and processing of applications for zoning, occupancy and/or building permit approvals for warehousing and motor freight garages and truck or transfer terminal uses in the I-L Light Industrial District in the City, and on the issuance of such approvals, will not deny property owners economically viable use of their property and will permit the City Administration, Council and Planning Commission necessary time to undertake a review of the Brunswick Zoning Code and possible amendment thereof.

WHEREAS: THE COUNCIL OF THE CITY OF BRUNSWICK HEREBY ORDAINS:

SECTION 1: The six (6) month temporary moratorium extension established by Ordinance No. 103-18 shall be extended for a period of six (6) months up to and including

January 23, 2020, wherein the City shall not accept or process any applications for zoning, occupancy and/or building permit approvals for warehousing and motor freight garages and truck or transfer terminal uses in the I-L Light Industrial District in the City, and further shall not issue any such approvals during said period.

SECTION 2: Whenever the provisions of this Ordinance conflict with any other Ordinance or
any provision of the Codified Ordinances of the City, the provisions of this Ordinance shall control.

SECTION 3: It is found and determined that all formal actions of this Council concerning and relating to the adoption of this Ordinance were adopted in an open meeting of this Council, and that all deliberations of this Council and any of its committees that resulted in such formal action, were in meetings open to the public, in compliance with all legal requirements, including Section 121.22 of the Ohio Revised Code.

SECTION 4: This Ordinance is hereby declared to be an emergency measure necessary for the immediate preservation of the public health, safety and general welfare of the City and its residents and property owners and for the additional reason that it is required to permit the City Administration, Council and Planning Commission necessary time to undertake a review of the Brunswick Zoning Code and possible amendment thereof. Therefore, the same shall be in full force and effect from and after its passage by the required number of votes or from the earliest time allowed by law.

PASSED: 1st Reading_____

2nd Reading_____

3rd Reading_____

ADOPTED: _____ AYES _____ NAYS _____

ATTEST: _____
Clerk of Council
Fijabi Julien-Gallam, CMC

THE CITY OF BRUNSWICK

PROPOSED LEGISLATION

DATE: 6/24/2019

TO: Vice Mayor Michael Abella Jr. and Members of City Council

FROM: Carl S. DeForest, City Manager

COPY: Mayor Ron Falconi

LEGISLATION: **ORD. NO. 40-19** - An emergency ordinance extending a temporary moratorium on the acceptance and processing of applications for zoning, occupancy, conditional use and/or building permit approvals for multi-family dwelling units in all zoning districts and the issuance of such approvals. - **1st Reading** (To be brought from Committee-of-the-Whole, *Administration/Brian Ousley*)

BACKGROUND: On February 11, 2019, City Council adopted Ordinance No. 3-19 extending the temporary moratorium on the acceptance and processing of applications for zoning, occupancy, conditional use and/or building permit approvals for Multi-Family Dwelling Units in any Zoning District in the City for an additional six (6) months up to and including August 12, 2019.

PURPOSE AND EXPLANATION: Council would like to extend the temporary moratorium. The current temporary moratorium ends in August while Council is on summer break.

IMPLEMENTATION SCHEDULE: Three readings and an emergency to not have a gap between the current and the new proposed legislation.

FINANCIAL INFORMATION:

FINANCIAL SUMMARY:

RECOMMENDED ACTION:

One Reading	No
Two Readings	No
Three Readings	Yes
Emergency	Yes
Suspension of Rules	Yes

If emergency or suspension of the rules, why the request?
Requesting that this be an emergency to meet the timeline.

ADDITIONAL INFORMATION:

CITY OF BRUNSWICK, OHIO
ORDINANCE NO._____

BY:

AN EMERGENCY ORDINANCE EXTENDING A TEMPORARY MORATORIUM ON THE ACCEPTANCE AND PROCESSING OF APPLICATIONS FOR ZONING, OCCUPANCY, CONDITIONAL USE AND/OR BUILDING PERMIT APPROVALS FOR MULTI-FAMILY DWELLING UNITS IN ALL ZONING DISTRICTS AND THE ISSUANCE OF SUCH APPROVALS.

WHEREAS: The City of Brunswick may legitimately regulate the location and approval of Multi-Family Dwelling Units, as defined in Codified Ordinance Section 1242.02(32)(c);

WHEREAS: On February 12, 2018, City Council adopted Ordinance No. 9-18, establishing a six (6) month temporary moratorium on the acceptance and processing of applications for zoning, occupancy, conditional use and/or building permit approvals for Multi-Family Dwelling Units in any Zoning District in the City effective as of February 12, 2018;

WHEREAS: On July 9, 2018, City Council adopted Ordinance No. 46-18 extending the temporary moratorium on the acceptance and processing of applications for zoning, occupancy, conditional use and/or building permit approvals for Multi-Family Dwelling Units in any Zoning District in the City for an additional six (6) months up to and including February 12, 2019;

WHEREAS: On February 11, 2019, City Council adopted Ordinance No. 3-19 extending the temporary moratorium on the acceptance and processing of applications for zoning, occupancy, conditional use and/or building permit approvals for Multi-Family Dwelling Units in any Zoning District in the City for an additional six (6) months up to and including August 12, 2019; and

WHEREAS: This Council believes that extending the temporary moratorium on the acceptance and processing of applications for zoning, occupancy, conditional use and/or building permit approvals for Multi-Family Dwelling Units in any Zoning District in the City, and on the issuance of such approvals, will not deny property owners economically viable use of their property and will permit the City Administration, Council and Planning Commission necessary time to undertake a review of the Brunswick Zoning Code and possible amendment thereof relative to the location and approval process for Multi-Family Dwelling Units.

WHEREAS: THE COUNCIL OF THE CITY OF BRUNSWICK HEREBY

ORDAINS:

SECTION 1: The six (6) month temporary moratorium extension established by Ordinance No. 3-19 shall be extended for a period of six (6) months up to and including February 12, 2020, wherein the City shall not accept or process any applications for zoning, occupancy, conditional use and/or building permit approvals for Multi-Family Dwelling Units in any Zoning District in the City, and further shall not issue any such approvals during said period.

SECTION 2: Whenever the provisions of this Ordinance conflict with any other Ordinance or
any provision of the Codified Ordinances of the City, the provisions of this Ordinance shall control.

SECTION 3: It is found and determined that all formal actions of this Council concerning and relating to the adoption of this Ordinance were adopted in an open meeting of this Council, and that all deliberations of this Council and any of its committees that resulted in such formal action, were in meetings open to the public, in compliance with all legal requirements, including Section 121.22 of the Ohio Revised Code.

SECTION 4: This Ordinance is hereby declared to be an emergency measure necessary for the immediate preservation of the public health, safety and general welfare of the City and its residents and property owners and for the additional reason that it is required to permit the City Administration, Council and Planning Commission necessary time to undertake a review of the Brunswick Zoning Code and possible amendment thereof relative to the location and approval process for Multi-Family Dwelling Units. Therefore, the same shall be in full force and effect from and after its passage by the required number of votes or from the earliest time allowed by law.

PASSED: 1st Reading_____

2nd Reading_____

3rd Reading_____

ADOPTED: _____ AYES _____ NAYS _____

ATTEST: _____
Clerk of Council
Fijabi Julien-Gallam, CMC

CITY OF BRUNSWICK, OHIO
ORDINANCE NO. 40-19

BY: Committee-of-the-Whole

AN EMERGENCY ORDINANCE EXTENDING A TEMPORARY MORATORIUM ON THE ACCEPTANCE AND PROCESSING OF APPLICATIONS FOR ZONING, OCCUPANCY, CONDITIONAL USE AND/OR BUILDING PERMIT APPROVALS FOR MULTI-FAMILY DWELLING UNITS IN ALL ZONING DISTRICTS AND THE ISSUANCE OF SUCH APPROVALS.

WHEREAS: The City of Brunswick may legitimately regulate the location and approval of Multi-Family Dwelling Units, as defined in Codified Ordinance Section 1242.02(32)(c);

WHEREAS: On February 12, 2018, City Council adopted Ordinance No. 9-18, establishing a six (6) month temporary moratorium on the acceptance and processing of applications for zoning, occupancy, conditional use and/or building permit approvals for Multi-Family Dwelling Units in any Zoning District in the City effective as of February 12, 2018;

WHEREAS: On July 9, 2018, City Council adopted Ordinance No. 46-18 extending the temporary moratorium on the acceptance and processing of applications for zoning, occupancy, conditional use and/or building permit approvals for Multi-Family Dwelling Units in any Zoning District in the City for an additional six (6) months up to and including February 12, 2019;

WHEREAS: On February 11, 2019, City Council adopted Ordinance No. 3-19 extending the temporary moratorium on the acceptance and processing of applications for zoning, occupancy, conditional use and/or building permit approvals for Multi-Family Dwelling Units in any Zoning District in the City for an additional six (6) months up to and including August 12, 2019; and

WHEREAS: This Council believes that extending the temporary moratorium on the acceptance and processing of applications for zoning, occupancy, conditional use and/or building permit approvals for Multi-Family Dwelling Units in any Zoning District in the City, and on the issuance of such approvals, will not deny property owners economically viable use of their property and will permit the City Administration, Council and Planning Commission necessary time to undertake a review of the Brunswick Zoning Code and possible amendment thereof relative to the location and approval process for Multi-Family Dwelling Units.

WHEREAS: THE COUNCIL OF THE CITY OF BRUNSWICK HEREBY

ORDAINS:

SECTION 1: The six (6) month temporary moratorium extension established by Ordinance No. 3-19 shall be extended for a period of six (6) months up to and including February 12, 2020, wherein the City shall not accept or process any applications for zoning, occupancy, conditional use and/or building permit approvals for Multi-Family Dwelling Units in any Zoning District in the City, and further shall not issue any such approvals during said period.

SECTION 2: Whenever the provisions of this Ordinance conflict with any other Ordinance or
any provision of the Codified Ordinances of the City, the provisions of this Ordinance shall control.

SECTION 3: It is found and determined that all formal actions of this Council concerning and relating to the adoption of this Ordinance were adopted in an open meeting of this Council, and that all deliberations of this Council and any of its committees that resulted in such formal action, were in meetings open to the public, in compliance with all legal requirements, including Section 121.22 of the Ohio Revised Code.

SECTION 4: This Ordinance is hereby declared to be an emergency measure necessary for the immediate preservation of the public health, safety and general welfare of the City and its residents and property owners and for the additional reason that it is required to permit the City Administration, Council and Planning Commission necessary time to undertake a review of the Brunswick Zoning Code and possible amendment thereof relative to the location and approval process for Multi-Family Dwelling Units. Therefore, the same shall be in full force and effect from and after its passage by the required number of votes or from the earliest time allowed by law.

PASSED: 1st Reading_____

2nd Reading_____

3rd Reading_____

ADOPTED: _____ AYES _____ NAYS _____

ATTEST: _____
Clerk of Council
Fijabi Julien-Gallam, CMC

THE CITY OF BRUNSWICK

PROPOSED LEGISLATION

DATE: 6/24/2019

TO: Vice Mayor Michael Abella Jr. and Members of City Council

FROM: Carl S. DeForest, City Manager
Grant Aungst

COPY: Mayor Ron Falconi

LEGISLATION: **RES. NO. 41-19** - An emergency resolution authorizing the City Manager to have entered into a Housing Revolving Loan Fund Administration Agreement with the State of Ohio, Development Services Agency. - **1st Reading** (To be brought from Committee-of-the-Whole, *Administration/Grant Aungst*)

BACKGROUND: The State of Ohio, Development Services Agency administers the federal Community Development Block Grant Program and HOME Investment Partnerships Program for the State of Ohio. It is necessary to enter into the Housing Revolving Loan Fund Administration Agreement and submit it to the State of Ohio.

PURPOSE AND EXPLANATION: The City Manager, with the approval of the Law Director, is hereby authorized to enter into a Housing Revolving Loan Fund Administration Agreement with the State of Ohio, Development Services Agency, attached as Exhibit "A". The Agreement is effective from January 1, 2019 to December 31, 2021.

IMPLEMENTATION SCHEDULE: Immediately.

FINANCIAL INFORMATION:

FINANCIAL SUMMARY: This agreement will allow for the City of Brunswick to receive program income. Program income is received when a home that previously received Community Housing Improvement Program monies has an attachable lien and it is sold. This Revolving Loan Fund Administration Agreement must be retroactive to January 1, 2019 as the previous agreement expired on December 31, 2018.

The original agreement expired as a result of the City being informed by a representative of the State that the Revolving Loan Fund Agreement was no longer necessary since the City of Medina was the grantee for the area. In June of 2019, the City was informed that the agreement is necessary and that it would be allowed to be retroactively applied to January 1, 2019 to correct the mistake.

RECOMMENDED

ACTION:

One Reading	No
Two Readings	No
Three Readings	No
Emergency	Yes
Suspension of Rules	No

If emergency or suspension of the rules, why the request?
This Resolution is hereby declared to be an emergency measure necessary for the immediate preservation of the public peace, property, health, safety, or welfare and for the additional reason that the Housing Revolving Loan Fund Administration Agreement must be submitted to the State of Ohio.

ADDITIONAL INFORMATION:

HOUSING REVOLVING LOAN FUND ADMINISTRATION AGREEMENT

This Housing Revolving Loan Fund Administration Agreement (the "Agreement") is made and entered into by and between the **State of Ohio, Development Services Agency,** located at 77 South High Street, P.O. Box 1001, Columbus, Ohio 43216-1001 (the "Grantor"), and the **City of Brunswick** located at **4095 Center Road, Brunswick, Ohio 44212** with F.T.I. Number: FTI **34-6006433** (the "Grantee"), and shall be effective beginning **January 1, 2019** (the "Effective Date") and terminate **December 31, 2021** (the "Termination Date").

BACKGROUND INFORMATION

A. Grantor, through its Office of Community Development ("OCD"), administers the federal Community Development Block Grant ("CDBG") Program and the HOME Investment Partnerships ("HOME") Program for the State of Ohio.

B. Grantee has been determined to be an eligible recipient of CDBG and/or HOME funds and Grantee has been awarded CDBG and/or HOME funds from the Grantor for use to finance eligible activities that may generate Program Income as defined herein.

C. Grantor has recognized the positive impact on community development initiatives when the use of Program Income is locally determined. Grantor has permitted the establishment of Housing Revolving Loan Funds within local political subdivisions to meet the primary development goals of: 1) improving the affordable housing stock; and 2) providing for the affordable housing needs of low-and moderate-income persons in designated areas of the Housing Revolving Loan Fund.

D. Grantor desires to have Grantee to administer a Housing Revolving Loan Fund using the CDBG and/or Home Program Income and Grantee desires to administer a Housing Revolving Loan Fund using the CDBG and/or Home Program Income for the purposes stated above.

E. Grantee has adopted a Resolution or Ordinance authorizing the execution of this Agreement.

NOW THEREFORE, in consideration of the foregoing and the mutual promises and covenants hereinafter set forth, and for other good and valuable consideration, the receipt and sufficiency of which are hereby acknowledged, the parties agree as follows:

STATEMENT OF THE AGREEMENT

1. Housing Revolving Loan Fund Capitalization. Grantee shall deposit any and all Housing Program Income into a Housing Revolving Loan Fund account held by the Grantee.

2. Definitions.

a.) Housing Revolving Loan Fund ("RLF") is a separate fund established for the purpose of accounting for Housing Program Income and of carrying out the specific activities designated in OCD's Housing Handbook and the applicable Community Housing Impact and Preservation (CHIP) Program Application Instructions, which, in turn, generate payments to the fund ("RLF Funds") for the continued use in carrying out the same activities.

b.) Housing Program Income is defined as gross income received by the recipient directly generated from the use of Ohio State Administered CDBG Program funds and/or Ohio State Administered HOME Program funds for housing activities.

3. RLF Plan and Use of Funds. Grantee has adopted the Local Housing Policy and Procedures Manual that has been previously submitted and approved by the Grantor. The Local Housing Policy and Procedures Manual must include the policies and procedures established by Grantor. Any changes to the Local Housing Policy and Procedures Manual must be submitted to Grantor for review and approval. Grantee shall use the Housing RLF Funds solely for the stated purposes set forth in this Agreement, OCD's Housing Handbook, the applicable CHIP Program Application Instructions, and the Local Housing Policy and Procedures Manual. All Housing Program Income funds must be expended in compliance with all CHIP Program requirements, including those found in Grantor's Non-Participating Jurisdiction Housing Handbook and the current Ohio Consolidated Plan.

4. Program Income Distribution for CHIP Program Partnerships. Grantee shall distribute Housing Program Income generated by an activity partially assisted with RLF Funds contributed by multiple CHIP Program Partners in conformance with the Grantee's OCD-approved CHIP Program Partnership Agreement.

5. Project Approvals. Grantee shall submit to Grantor a request for approval if the proposed project does not meet the requirements of this Agreement, OCD's Housing Handbook, the applicable CHIP Program Application Instructions, and/or the Local Housing Policy and Procedures Manual. Grantee must receive Grantor's written approval prior to the commencement of the Grantee's local project.

6. **National Objective/Income Eligibility Requirements.** Grantee shall ensure that all projects funded as a result of this Agreement meet the applicable CDBG national objective and HOME income eligibility requirements of the provision of a housing related direct benefit for low-and-moderate income persons.

7. **Subrecipient Agreements.** Grantee shall not subgrant the Housing Program Income funds to any other local political jurisdiction or non-profit agency. Grantee may contract with a non-profit agency to administer the RLF Funds, but the funds are to remain with the Grantee in the Revolving Loan Fund Account. If there is a change in the designated administrative agent of the RLF Funds, it is the responsibility of the Grantee to notify OCD within fifteen (15) days of any change in status of the designated administrative agent.

8. **Accounting of RLF Funds.** CDBG RLF Funds and HOME RLF Funds shall be deposited and maintained in separate fund accounts upon the books and records of Grantee (the "Accounts"). Grantee shall keep all records of the Accounts in a manner that is consistent with generally accepted accounting principles. All disbursements from the Accounts shall be for obligations incurred in the performance of this Agreement and shall be supported by contracts, invoices, vouchers, and other data, as appropriate, evidencing the necessity of such expenditure.

9. **Reporting Requirements.** Grantee shall submit RLF Status Reports to Grantor no more than (30) days after notification of the RLF Status Report request. RLF Status Reports may include but are not limited to the following: program income; program activities; and program outcomes.

10. **Compliance with General CDBG and HOME Requirements.** Grantee shall comply with all applicable provisions of the statutes, rules, regulations and guidelines as passed by Congress or promulgated by the Secretary of the Department of Housing and Urban Development (HUD).

11. **Compliance with Environmental Requirements.** Grantee shall comply with the provisions of 24 CFR Part 58, Environmental Review Procedures for Entities Assuming HUD Environmental Responsibilities, for all activities funded with Housing Program Income.

a. Use of Housing Program Income in association with an active Community Housing Impact and Preservation (CHIP) Program Grant.
   i. If Grantee is the responsible entity for an active CHIP grant and Grantee uses its Housing Program Income to assist a CHIP-funded activity, the environmental procedures associated with the CHIP grant shall fulfill the environmental requirements for the Housing Program Income. Grantee does not submit separate Request for Release of Funds and/or Certification documentation to Grantor for the Housing Program Income, and Grantor does not issue a Project Specific Release of Funds Respecting Environmental Grant Conditions for the Housing Program Income.
   ii. If Grantee is a partnering jurisdiction committing Housing Program Income to an active CHIP Program partnership, Grantee must prepare environmental review records, publish applicable public notices, and submit Request for Release of Funds and/or Certification documentation to Grantor for each activity assisted with Housing Program Income. Grantee may not commit Housing Program Income or initiate project work until Grantor issues a Project Specific Release of Funds Respecting Environmental Grant Conditions for the Housing Program Income and Grantee fulfills any applicable site-specific environmental review requirements.

b. Use of Housing Program Income independent of a Community Housing Impact and Preservation (CHIP) Program Grant. If Grantee uses Housing Program Income independent of an active CHIP-funded activity, Grantee must prepare environmental review records, publish any applicable public notices, and submit Request for Release of Funds and/or Certification documentation to Grantor. Grantee may not commit Housing Program Income or initiate project work until Grantor issues a Project Specific Release of Funds Respecting Environmental Grant Conditions for the Housing Program Income and Grantee fulfills any applicable site-specific environmental review requirements.

12. **Acquisition and Relocation.** Grantee shall comply with the relocation requirements of Title II and the acquisition requirements of Title III of the Uniform Relocation Assistance and Real Property Acquisition Policies Act of 1970, as amended, and the implementation regulations set forth in 570.488 and 49 CFR Part 24 as they apply to the activities covered by this Agreement. Grantee shall comply with the process established under the Anti-Displacement and Relocation Plan.

13. **Term of the Agreement.** This Agreement shall begin on the Effective Date and shall terminate on the Termination Date, unless otherwise modified pursuant to Section 30(f) herein. At least sixty (60) days prior to the Termination Date, Grantor will determine if the Grantee continues to have the capacity to administer the Housing RLF Funds based on the performance of the Grantee and its designated administrative agent. Grantor shall promptly notify Grantee in writing of a determination questioning administrative capacity. Grantor reserves the right to determine if the State of Ohio will renew this Agreement to allow the Grantee to continue to administer the RLF, have the Grantee close out the RLF by executing a CDBG and/or HOME Closeout Agreement or recapture the RLF Funds.

14. **Records, Access and Maintenance.** Grantee shall establish and maintain for at least three (3) years from the expiration of this Agreement, all direct information and such records as are reasonably related to the administration of an RLF as set forth in OCD's Housing Handbook. Both parties further agree that records required by the Grantor with respect to any questioned costs, audit disallowances, litigation or dispute between the Grantor and the Grantee shall be maintained for the time needed for the

resolution of said question and that in the event of early termination of this Agreement as provided in Section 21 of this Agreement, or if for any other reason the Grantor shall require a review of the records related to the RLF Funds, the Grantee shall, at its own cost and expense, segregate all such records related to the Housing RLF Funds from its other records of operation.

15. **Inspections.** At any time during normal business hours upon three days prior written notice and as often as Grantor may deem necessary and in such a manner as not to interfere unreasonably with the normal business operations, Grantee shall make available to Grantor and its agents, appropriate state agencies or officials, HUD officials and the U.S. Government Accountability Office (GAO) for examination, all of its records with respect to matters covered by this Agreement including, but not limited to, records of personnel and conditions of employment and shall permit Grantor to audit, examine and make excerpts or transcripts from such records.

16. **Audits.** The Grant Funds shall be audited according to the requirements of 2 CFR 200. In addition, Grantee must follow the guidelines provided in the OCD Financial Management Rules and Regulations Handbook. The Grantee shall submit to the Federal Audit Clearinghouse (FAC) and make available for public inspection a copy of the single audit, data collection form, and reporting package as described in 2 CFR 200 within the earlier of 30 days after receipt of the auditor's report(s) or nine months after the end of the audit period. No later than seven (7) days following submission to the FAC, the Grantee must notify ODSA at singleaudit@development.ohio.gov that the single audit was submitted to the FAC. A copy of the audit report may be attached, but is not required.

17. **Equal Employment Opportunity.** Grantee will not discriminate against any employee or applicant for employment because of race, religion, color, sex, national origin, disability, age, military status, or ancestry. Grantee will take affirmative action to ensure that applicants are considered for employment and that employees are treated during employment, without regard to their race, religion, color, sex, national origin, disability, age, military status, or ancestry. Grantee will, in all solicitations or advertisements for employees placed by or on behalf of Grantee, state that all qualified applicants will receive consideration for employment without regard to race, religion, color, sex, national origin, disability, age, military status or ancestry. Grantee will incorporate the requirements of this paragraph in all of its respective contracts for any of the work for which the RLF Funds are expended (other than subcontracts for standard commercial supplies or raw materials), and Grantee will require all of its subcontractors for any part of such work to incorporate such requirements in all subcontracts for such work.

18. **Prevailing Wage Rates and Labor Standards.** In the commission of any Project(s) wherein federal funds are used to finance construction work as defined in the Code of Federal Regulations (CFR) Title 29, Part 5 to the extent that such activity is subject to the Davis-Bacon Act (40 United States Code (U.S.C.) 3141 to 3148, as amended), all laborers and mechanics employed by contractors or subcontractors on any such construction work assisted under this Agreement shall be paid the wages that have been determined by the U.S. Secretary of Labor to be the wages prevailing for the corresponding classes of laborers and mechanics employed on project(s) of a character similar to the contract work in the civil subdivision of the state wherein the work is to be performed. In addition, all laborers and mechanics employed by contractors or subcontractors on such construction work assisted under this Agreement shall be paid overtime compensation in accordance with the provisions of the Contract Work Hours and Safety Standards Act, 40 U.S.C. 3701 to 3708. Furthermore, Grantee shall require that all contractors and subcontractors shall comply with all regulations issued pursuant to these acts and with other applicable federal and state laws and regulations.

In the event that the construction work to be undertaken does not lie within the purview of the Davis-Bacon Act, and neither the federal government nor any of its agencies prescribes predetermined minimum wages to be paid to mechanics and laborers to be employed in the construction work to be assisted by this Project(s), Grantee will comply with the provisions of Ohio Revised Code (ORC) Sections 4115.03 to 4115.16, inclusive, as applicable, with respect to the payment of all mechanics and laborers employed in such construction work.

19. **Use of Federal Grant Funds.** Grantee acknowledges that this Agreement involves the use of federal funds and as such, is subject to audit by the agency of the United States Government granting the funds to Grantor for the purposes of performing the work and activities as listed in the Grantee's RLF project report forms and in conformance with OCD's Revolving Loan Fund Policies and Procedures Manual, OCD's Housing Handbook, and the Local Housing Policy and Procedures Manual. Grantee shall fully reimburse Grantor for any cost of Grantee which is disallowed by said federal agency and which must be refunded thereto by Grantor.

20. **Property and Equipment Purchases.** All items purchased by Grantee are and shall remain the property of Grantee, except if Grantor exercises its right to terminate this Agreement pursuant to paragraph 21, in which case all property and equipment purchased by Grantee with any Grant Funds herein awarded shall revert to Grantor. Grantee shall provide for the security and safekeeping of all items obtained through this Agreement.

21. **Termination.**

a. Grantor may immediately terminate this Agreement by giving reasonable written notice of termination to Grantee for any of the following occurrences:

   i. Failure of Grantee to fulfill in a timely and proper manner any of its obligations under this Agreement.

   ii. Failure of Grantee to submit any report required by this Agreement that is complete and accurate.

   iii. Failure of Grantee to use the Grant Funds for the stated purposes in this Agreement.

   iv. Cancellation of the grant of funds from HUD.

b. Early Termination: Grantor may also terminate this Agreement if Grantee (i) defaults under another Agreement between the Grantor and/or the Tax Credit Authority and Grantee and/or the Clean Ohio Council, (ii) admits Grantee's inability to pay its debts as such debts become due, (iii) Grantee commences a voluntary bankruptcy, (iv) an involuntary bankruptcy action occurs against Grantee which remains undismissed or unstayed for 60 days, (v) Grantee fails to meet the minimum funding requirements under the Employee Retirement Income Security Act or other such employee benefits plan, or (vi) Grantor has reason to believe Grantee has ceased operations at the Project location. The events permitting early termination by Grantor shall be considered a default by Grantee and subject to the Effects of Termination under Section 18 of this Agreement.

c. Grantor reserves the right to suspend the administration of the RLF at any time for failure of the Grantee or its designated administrative agent to administer the local RLF in compliance with the OCD's Housing Policies and Procedures Manual which is not attached but incorporated herein by reference. Throughout this Agreement, Grantee and any designated administrative agent must continue to demonstrate administrative capacity in the administration of the RLF. Failure to accurately report on the RLF Funds could result in Grantor placing the RLF Funds on hold or recapturing the RLF Funds. Grantor also reserves the right to request the RLF Funds be returned to the State of Ohio upon failure to comply with the OCD RLF Policies and Procedures Manual.

22. Effects of Termination. Within 60 days after termination of this Agreement, Grantee shall surrender all reports, documents, and other materials assembled and prepared pursuant to this Agreement, which shall become the property of Grantor, unless otherwise directed by Grantor. After receiving written notice of termination, Grantee shall incur no new obligations and shall cancel as many outstanding obligations as possible. Upon compliance with this Section, Grantee shall receive compensation for all activities satisfactorily performed prior to the effective date of termination.

23. Forbearance Not a Waiver. No act of forbearance or failure to insist on the prompt performance by Grantee of its obligations under this Agreement, either express or implied, shall be construed as a waiver by Grantor of any of its rights hereunder.

24. Conflict of Interest. No personnel of Grantee, contractor of Grantee or personnel of any such contractor, and no public official who exercises any functions or responsibilities in connection with the review or approval of any work completed under this Agreement, shall, prior to the completion of such work, voluntarily or involuntarily acquire any personal interest, direct or indirect, which is incompatible or in conflict with the discharge or fulfillment of his or her functions or responsibilities with respect to the completion of the work contemplated under this Agreement. Grantee shall immediately disclose in writing to Grantor any such person who, prior to or after the execution of this Agreement, acquires any personal interest, voluntarily or involuntarily. Grantee shall cause any such person who, prior to or after the execution of this Agreement, acquires any personal interest, voluntarily or involuntarily, to immediately disclose such interest to Grantor in writing. Thereafter, such person shall not participate in any action affecting the work under this Agreement unless Grantor determines that, in light of the personal interest disclosed, his or her participation in any such action would not be contrary to the public interest.

25. Liability. Unless Grantee is an Ohio political sub-division and can prove to Grantor that it is self-insured, Grantee shall maintain liability and property insurance to cover actionable legal claims for liability or loss which are the result of injury to or death of any person, damage to property (including property of Grantor) caused by the negligent acts or omissions, or negligent conduct of Grantee, to the extent permitted by law, in connection with the activities of this Agreement. Furthermore, each party to this Agreement agrees to be liable for the negligent acts or negligent omissions by or through itself, its employees, agents and subcontractors. Each party further agrees to defend itself and themselves and pay any judgments and costs arising out of such negligent acts or omissions, and nothing in this Agreement shall impute or transfer any such liability from one to the other.

26. Adherence to State and Federal Laws, Regulations.

a. General. Grantee shall comply with all applicable federal, state and local laws in the performance of Grantee's obligations under this Agreement, the completion of the Project and the operation of the Project as long as Grantee has any obligation to Grantor under this Agreement. Without limiting the generality of such obligation, Grantee shall pay or cause to be paid all unemployment compensation, insurance premiums, workers' compensation premiums, income tax withholding, social security withhold, and any and all other taxes or payroll deductions required for all employees engaged by Grantee in connection with the Project, and Grantee shall comply with all applicable environmental, zoning, planning and building laws and regulations.

b. Ethics. Grantee, by its signature on this document, certifies: (1) it has reviewed and understands the Ohio ethics and conflicts of interest laws including, without limitation, ORC Section 102.01 et seq., Sections 2921.01, 2921.42, 2921.421, 2921.43, and 3517.13(I) and (J), and (2) will take no action inconsistent with those laws, as any of them may be amended or supplemented from time to time. Grantee understands that failure to comply with the Ohio ethics and conflict of interest laws, is in itself, grounds for termination of this Agreement and the grant of funds made pursuant to this Agreement and may result in the loss of other contracts or grants with the State of Ohio.

27. Outstanding Liabilities. Grantee represents and warrants that it does not owe: (1) any delinquent taxes to the State of Ohio (the "State") or a political subdivision of the State; (2) any amount to the State or a state agency for the administration or enforcement of any environmental laws of the State; and (3) any other amount to the State, a state agency or a political subdivision of the State that are past due, whether or not the amounts owed are being contested in a court of law.

28. **Falsification of Information.** Grantee affirmatively covenants that it has made no false statements to Grantor in the process of obtaining this award of the Grant Funds. If Grantee has knowingly made a false statement to Grantor to obtain this award of the Grant Funds, Grantee shall be required to return all the Grant Funds immediately pursuant to ORC Section 9.66(C) (2) and shall be ineligible for any future economic development assistance from the State, any state agency or a political subdivision pursuant to ORC Section 9.66(C) (1). Any person who provides a false statement to secure economic development assistance may be guilty of falsification, a misdemeanor of the first degree, pursuant to ORC 2921.13(F)(1), which is punishable by a fine of not more than $1,000 and/or a term of imprisonment of not more than one hundred eighty (180) days.

29. **Public Records.** Grantee acknowledges that this Agreement and other records in the possession or control of Grantor regarding the Project are public records under ORC Section 149.43 and are open to public inspection unless a legal exemption applies.

30. **Miscellaneous**.

a. Governing Law. This Agreement shall be governed by the laws of the State of Ohio as to all matters, including but not limited to matters of validity, construction, effect and performance.

b. Forum and Venue. Grantee irrevocably submits to the non-exclusive jurisdiction of any federal or state court sitting in Columbus, Ohio, in any action or proceeding arising out of or related to this Agreement, Grantee agrees that all claims in respect of such action or proceeding may be heard and determined in any such court, and Grantee irrevocably waives any objection it may now or hereafter have as to the venue of any such action or proceeding brought in such court or that such court is an inconvenient forum. Nothing in this Agreement shall limit the right of Grantor to bring any action or proceedings against Grantee in the courts of any other jurisdiction. Any actions or proceedings by Grantee against Grantor or the State of Ohio involving, directly or indirectly, any matter in any way arising out of or related to this Agreement shall be brought only in a court in Columbus, Ohio.

c. Entire Agreement. This Agreement, including its exhibits and documents incorporated into it by reference, constitutes the entire agreement and understanding of the parties with respect to its subject matter. Any prior written or verbal agreement, understanding or representation between parties or any of their respective officers, agents, or employees is superseded and no such prior agreement, understanding or representation shall be deemed to affect or modify any of the terms or conditions of this Agreement.

d. Severability. Whenever possible, each provision of this Agreement shall be interpreted in such manner as to be effective and valid under applicable law, but if any provision of this Agreement is held to be prohibited by or invalid under applicable law, such provision shall be ineffective only to the extent of such prohibition or invalidity, without invalidating the remainder of such provisions of this Agreement.

e. Notices. All notices, consents, demands, requests and other communications which may or are required to be given hereunder shall be in writing and shall be deemed duly given if personally delivered or sent by United States mail, registered or certified, return receipt requested, postage prepaid, to the addresses set forth hereunder or to such other address as the other party hereto may designate in written notice transmitted in accordance with this provision.

i. In the case of Grantor, to:

Ohio Development Services Agency
Office of Community Development
77 South High Street, P.O. Box 1001
Columbus, Ohio 43216-1001
Attention: Deputy Chief

ii. In the case of Grantee, to:

Grantee Name: City of Brunswick

Address: 4095 Center Road

City, State, Zip: Brunswick, Ohio 44212

Attention: Ron Falconi

f. Amendments or Modifications. Either party may at any time during the term of this Agreement request amendments or modifications, as described in the applicable State of Ohio Consolidated Plan Submission. Requests for amendment or modification of this Agreement shall be in writing and shall specify the requested changes and the justification of such changes. The parties shall review the request for modification in terms of the regulations and goals relating to the Project(s). Should the parties consent to modification of this Agreement, then an amendment shall be drawn, approved, and executed in the same manner as the original agreement.

g. Pronouns. The use of any gender pronoun shall be deemed to include all the other genders, and the use of any singular noun or verb shall be deemed to include the plural, and vice versa, whenever the context so requires.

h. Headings. Section headings contained in this Agreement are inserted for convenience only and shall not be deemed to be a part of this Agreement.

i. Assignment. Neither this Agreement nor any rights, duties, or obligations described herein shall be assigned, subcontracted or subgranted by Grantee without the prior express written consent of Grantor.

j. Permissible Expenses. If "travel expenses," as defined in Ohio Administrative Code Section 126-1-02 (the "Expense Rule"), are a cost of the Project eligible for reimbursement with Grant Funds, Grantee shall be reimbursed accordingly. Grantee agrees that it shall not be reimbursed and Grantor shall not pay any items that are deemed to be "non-reimbursable travel expenses" under the Expense Rule, whether purchased by the Grantee or Grantor or their respective employees or agents.

k. Binding Effect. Each and all of the terms and conditions of this Agreement shall extend to and bind and inure to the benefit of Grantee, its successors and permitted assigns.

l. Survival. Any provision of this Agreement which, by its nature, is intended to survive the expiration or other termination of this Agreement shall so survive and shall benefit the parties and their respective successors and permitted assigns.

m. Counterparts; PDF Accepted. This Agreement may be executed in any number of counterparts, each of which when so executed shall be deemed to be an original and all of which taken together shall constitute one and the same agreement. Copies of signatures sent by facsimile transmission or provided electronically in portable document format ("PDF") shall be deemed to be originals for purposes of execution and proof of this Agreement

Signature: Each of the parties has caused this Housing Revolving Loan Fund Administration Agreement to be executed by its authorized representatives as of the dates set forth below, their respective signatures effective as of the Effective Date:

GRANTEE:	GRANTOR:
Brunswick	**State of Ohio** **Development Services Agency**
Ron Falconi	Lydia Mihalki, Director
By: _____	By: _____
Printed Name: _____	Printed Name: _____
Title: _____	Title: _____
Date: _____	Date: _____

CITY OF BRUNSWICK, OHIO
RESOLUTION NO. _____

BY:

AN EMERGENCY RESOLUTION AUTHORIZING THE CITY MANAGER TO HAVE ENTERED INTO A HOUSING REVOLVING LOAN FUND ADMINISTRATION AGREEMENT WITH THE STATE OF OHIO, DEVELOPMENT SERVICES AGENCY.

WHEREAS: The State of Ohio, Development Services Agency administers the federal Community Development Block Grant Program and the HOME Investment Partnerships Program for the State of Ohio; and

WHEREAS: It is necessary to enter into the Housing Revolving Loan Fund Administration Agreement and submit same to the State of Ohio to allow for acceptance of grant repayments made thereunder.

WHEREAS: THE COUNCIL OF THE CITY OF BRUNSWICK HEREBY RESOLVES:

SECTION 1: That the City Manager, with the approval of the Director of Law, is hereby authorized to have entered into a Housing Revolving Loan Fund Administration Agreement with the State of Ohio, Development Services Agency as attached hereto as Exhibit "A".

SECTION 2: That this Resolution is hereby declared to be an emergency measure necessary for the immediate preservation of the public peace, property, health, safety, or welfare and for the additional reason that the Housing Revolving Loan Fund Administration Agreement must be submitted to the State of Ohio to allow for immediate acceptance of grant repayments. Therefore, the same shall be in full force from and after its passage by the required number of votes or from the earliest time allowed by law.

PASSED: 1st Reading_____

Rules Suspended: AYES _____ NAYS _____

ADOPTED: _____ AYES _____ NAYS _____

ATTEST: _____
Clerk of Council
Fijabi Julien-Gallam, CMC

CITY OF BRUNSWICK, OHIO
RESOLUTION NO. __41-19__

BY: Committee-of-the-Whole

AN EMERGENCY RESOLUTION AUTHORIZING THE CITY MANAGER TO HAVE ENTERED INTO A HOUSING REVOLVING LOAN FUND ADMINISTRATION AGREEMENT WITH THE STATE OF OHIO, DEVELOPMENT SERVICES AGENCY.

WHEREAS: The State of Ohio, Development Services Agency administers the federal Community Development Block Grant Program and the HOME Investment Partnerships Program for the State of Ohio; and

WHEREAS: It is necessary to enter into the Housing Revolving Loan Fund Administration Agreement and submit same to the State of Ohio to allow for acceptance of grant repayments made thereunder.

WHEREAS: THE COUNCIL OF THE CITY OF BRUNSWICK HEREBY RESOLVES:

SECTION 1: That the City Manager, with the approval of the Director of Law, is hereby authorized to have entered into a Housing Revolving Loan Fund Administration Agreement with the State of Ohio, Development Services Agency as attached hereto as Exhibit "A".

SECTION 2: That this Resolution is hereby declared to be an emergency measure necessary for the immediate preservation of the public peace, property, health, safety, or welfare and for the additional reason that the Housing Revolving Loan Fund Administration Agreement must be submitted to the State of Ohio to allow for immediate acceptance of grant repayments. Therefore, the same shall be in full force from and after its passage by the required number of votes or from the earliest time allowed by law.

PASSED: 1st Reading_____

Rules Suspended: AYES _____ NAYS _____

ADOPTED: _____ AYES _____ NAYS _____

ATTEST: _____
Clerk of Council
Fijabi Julien-Gallam, CMC

THE CITY OF BRUNSWICK

PROPOSED LEGISLATION

DATE: 6/24/2019

TO: Vice Mayor Michael Abella Jr. and Members of City Council

FROM: Carl S. DeForest, City Manager
Todd Fischer

COPY: Mayor Ron Falconi

LEGISLATION: **ORD. NO. 42-19** - An emergency ordinance to advance funds **- 1st Reading** (To be brought from Finance Committee, *Administration/Todd Fischer*)

BACKGROUND: In order to comply with the Ohio Revised Code Section 5705 and to have money in place, advances may become necessary as certain financial situations arise. An advance is the temporary movement of money from one fund to another fund that will be repaid upon the completion of an anticipated event. The process of advancing funds is audited under the direction of the Auditor of State for compliance every year. Advance legislation is generally presented two to three times a year or more, if deemed necessary.

PURPOSE AND EXPLANATION: See description listed in background (above).

IMPLEMENTATION SCHEDULE: Discuss at the June 24, 2019 Finance Committee meeting and move to the June 24, 2019 Council agenda as an emergency with suspension of the rules.

FINANCIAL INFORMATION:

FINANCIAL SUMMARY: Advances do not have a financial impact on the City funds as a collective whole. Advances are merely the temporary movement of money from one fund to another to comply with the Ohio Revised Code Section 5705. The advance process is audited by the Auditor of State or independent auditor. Advances are included in the City's adopted budget and are required to be approved by City Council.

RECOMMENDED ACTION:

One Reading	Yes
Two Readings	No
Three Readings	No
Emergency	Yes
Suspension of Rules	Yes

If emergency or suspension of the rules, why the request?

Recommended approval as an emergency with suspension of the rules. Emergency clause necessary to allow funding to be in place to administer plans and/or purchase orders for various projects, grants, etc.

ADDITIONAL INFORMATION: None.

CITY OF BRUNSWICK, OHIO
ORDINANCE NO. 42-19

By: Mrs. Hanek, Mr. Ousley and Mr. Delsanter

AN EMERGENCY ORDINANCE TO ADVANCE FUNDS

WHEREAS: The City of Brunswick wishes to advance monies from the General Fund #001 to the EPA Grant Fund #337 to temporarily fund the 2019 Community and Litter Ohio Environmental Protection Agency Grant until grant reimbursements are received, and;

WHEREAS: The City of Brunswick wishes to advance monies from the General Fund #001 to the Department of Justice Federal Grant Fund #129 to temporarily fund the 2015-JG-A02-6712A Edward Byrne Memorial Justice Grant (Communication) portion until federal grant reimbursements have been received, and;

WHEREAS: The City of Brunswick wishes to advance monies from the General Fund #001 to the Department of Justice Federal Grant Fund #129 to temporarily fund the 2018-JG-A02-6712 Edward Byrne Memorial Justice Grant (Evidence Room) portion until federal grant reimbursements have been received, and;

THE COUNCIL OF THE CITY OF BRUNSWICK HEREBY ORDAINS

SECTION 1: That the following funds are hereby advanced:

FROM: General Fund (#001)
TO: EPA Grant Fund (#337)
AMOUNT: $200,000.00

FROM: General Fund (#001)
TO: Department of Justice Federal Grant Fund (#129)
AMOUNT: $10,735.20

FROM: General Fund (#001)
TO: Department of Justice Federal Grant Fund (#129)
AMOUNT: $13,642.50

SECTION 2: This Ordinance is declared to be an emergency measure necessary for the immediate preservation of the public peace, property, health, safety, welfare, and providing for the usual daily operation of a municipal department, and for the further reason that proper funding sources be advanced. Therefore, the same shall be in full force and effect from and after its passage by the required number of votes.

PASSED: 1st Reading _____

Rules Suspended: AYES _____ NAYS _____

ADOPTED: _____ AYES _____ NAYS _____

ATTEST: _____
Clerk of Council
Fijabi Julien-Gallam, CMC

THE CITY OF BRUNSWICK

PROPOSED LEGISLATION

DATE: 6/24/2019

TO: Vice Mayor Michael Abella Jr. and Members of City Council

FROM: Carl S. DeForest, City Manager
Todd Fischer

COPY: Mayor Ron Falconi

LEGISLATION: **ORD. NO. 43-19** - An emergency ordinance authorizing the transfer of the remaining balances in the Special Assessment Grafton Road III Bond Retirement Sub-Fund to the General Obligation Bond Retirement Fund - **1st Reading** (To be brought from Finance Committee, *Administration/Todd Fischer*)

BACKGROUND: On September 8, 1997, the Council of the City of Brunswick, Ohio, adopted Ordinance Number 117-97, creating Special Assessment Grafton Road III Bond Retirement Sub-Fund to account for special assessments collected by the County Auditor for the payment of bond principal and interest.

By December 1, 2018, the City of Brunswick had paid all of the remaining debt service on the Special Assessment Grafton Road III Bond Retirement Sub-Fund.

All obligations, for the listed funds, have been incurred, paid, and that there are no outstanding obligations owed.

The unexpended balance is no longer needed for the retirement of bond principal and interest and therefore shall be transferred to the General Obligation Bond Retirement Fund.

PURPOSE AND EXPLANATION: To authorize and direct the Director of Finance to 1) transfer to the General Obligation Bond Retirement Fund (Fund #771), all moneys remaining in the Special Assessment Grafton Road III Bond Retirement Sub-Fund #780 and 2) close Special Assessment Grafton Road III Bond Retirement (Sub-Fund #780) as created by Council Ordinances #117-97.

IMPLEMENTATION SCHEDULE: Discuss at the June 24, 2019 Finance Committee meeting and move to the June 24, 2019 Council agenda as an emergency with suspension of the rules.

FINANCIAL INFORMATION:

FINANCIAL SUMMARY: Transfers do not have a financial impact on the City funds as a collective whole. Transfers are merely permanent movement of money from one fund to another to comply with the Ohio Revised

Code Section 5705. The transfer process is audited by the Auditor of State or independent auditor. Transfers between eligible funds are included in the City's adopted budget and are required to be approved by City Council. The closing of funds also have no financial impact but do keep the accounting records of the City up to date.

RECOMMENDED ACTION:

One Reading	Yes
Two Readings	No
Three Readings	No
Emergency	Yes
Suspension of Rules	Yes

If emergency or suspension of the rules, why the request?
Recommendation is for emergency and suspension of the rules to keep accounting records up to date and to move funding sources (left over interest revenue) to proper place now that the Special Assessment debt obligations have been paid in full.

ADDITIONAL INFORMATION: None.

CITY OF BRUNSWICK, OHIO
ORDINANCE NO. 43-19

By: Mrs. Hanek, Mr. Ousley and Mr. Delsanter

AN EMERGENCY ORDINANCE AUTHORIZING THE TRANSFER OF THE REMAINING BALANCE IN THE SPECIAL ASSESSMENT GRAFTON ROAD III BOND RETIREMENT SUB-FUND TO THE GENERAL OBLIGATION BOND RETIREMENT FUND.

WHEREAS: On September 8, 1997, the Council of the City of Brunswick, Ohio, adopted Ordinance Number 117-97, creating Special Assessment Grafton Road III Bond Retirement Sub-Fund to account for special assessments collected by the County Auditor for the payment of bond principal and interest; and

WHEREAS: By December 1, 2018, the City of Brunswick had paid all of the remaining debt service on the Special Assessment Grafton Road III Bond Retirement Sub-Fund; and

WHEREAS: All obligations, for the listed funds, have been incurred, paid, and that there are no outstanding obligations owed; and

WHEREAS: The unexpended balance is no longer needed for the retirement of bond principal and interest and therefore shall be transferred to the General Obligation Bond Retirement Fund; and

WHEREAS: Any remaining special assessment delinquency collections shall be credited to the General Bond Retirement Fund.

THE COUNCIL OF THE CITY OF BRUNSWICK HEREBY ORDAINS:

SECTION 1: This Council confirms all of the findings and determinations set forth in the preambles to this Ordinance.

SECTION 2: This Council authorizes and directs the Director of Finance to transfer to the General Obligation Bond Retirement Fund (Fund #771), all moneys remaining in the Special Assessment Grafton Road III Bond Retirement Sub-Fund #780.

SECTION 3: This Council authorizes and directs the Director of Finance to close Special Assessment Grafton Road III Bond Retirement (Sub-Fund #780) as created by Council Ordinances #117-97.

SECTION 4: This Ordinance is declared to be an emergency measure necessary for the immediate preservation of the public peace, property, health, safety, welfare, and providing for the usual daily operation of a municipal department, and for the further reasons that the accounting records be kept up to date and proper funding sources be transferred.

Therefore, the same shall be in full force and effect from and after its passage by the required number of votes.

PASSED: 1st Reading ___

Rules Suspended: AYES ___NAYS ___

ADOPTED: _____AYES ___NAYS ___

ATTEST: _____
Clerk of Council
Fijabi Julien-Gallam, CMC

THE CITY OF BRUNSWICK

PROPOSED LEGISLATION

DATE: 6/24/2019

TO: Vice Mayor Michael Abella Jr. and Members of City Council

FROM: Carl S. DeForest, City Manager
Todd Fischer

COPY: Mayor Ron Falconi

LEGISLATION: **ORD. NO. 44-19** - An emergency Ordinance amending Ordinances #89-18 and #20-19 to include amendments to the appropriations budget for the year ending December 31, 2019 as incorporated in Exhibit "A" attached hereto. **- 1st Reading** (To be brought from the Finance Committee, *Administration/Todd Fischer*)

BACKGROUND: In order to comply with the Ohio Revised Code Section 5705 any and all activity of the City must be included in the budget. As actual information is obtained and compared to estimates or new items are requested to be added or deleted by the respective departments, it is necessary and required to present the proposed budget amendments to Council for approval. This process is required by law and audited under the direction of the Auditor of State for compliance every year.

PURPOSE AND EXPLANATION: See fiscal section and related attachments for additional information.

IMPLEMENTATION SCHEDULE: Discuss at the June 24, 2019 Finance Committee meeting and move to the June 24, 2019, Council agenda, as an emergency with suspension of the rules.

FINANCIAL INFORMATION:

FINANCIAL SUMMARY: The total financial impact of this legislation is a net increase to the overall City appropriation budget by $897,233.77. The largest component of the increase relates to $533,755.40 in proposed transfers and advances between funds. Transfers and advances are movement of money between funds but are not considered expenditures. However, transfers and advances are appropriated and approved by City Council. The remaining significant items relate to: 1) $308,468.23 increase in roadway construction dollars for the SCM&R Fund #117 as a result of the anticipated and additional gas taxes to be received in 2019. The increase in gas taxes is as a result of the State legislature decision to increase gas taxes, effective July 1, 2019. Estimates used were provided by the Ohio Department of Transportation. 2) $200,000 grant from the OEPA to cover a portion of the recycle cart costs. This saves the residents and the Refuse Fund #223 $200,000 and is also included in this budget amendment. The receipt of this grant was anticipated when the $19.30 monthly residential refuse rate was established. 3) $85,000 for radio replacement in the Division of Fire. This is recommended to sync up and improve communication with the Division of Police and the radio

replacement project. 4) $135,000 reduction per the request of the Parks & Recreation Director to delay the Recreation Center's waterline replacement project. The Director is currently reviewing estimated costs and timing of the project for next year. All other items may be important, but in terms of dollars, are not significant enough to list out separately in this summary. All proposed amendments are summarized and detailed out with a description in the attached Exhibits.

Exhibit A is the legal document required to be reviewed and adopted by Council pursuant to Ohio Revised Code Section 5705 for these budget amendments to be adopted.

Exhibit B is provided for informational and review purposes only. This document lists out the explanations and amounts for each proposed budget amendment.

It's important to note that this legislation only has budgetary impact and actual expenditures or transfers of City funds and approvals of those expenditures or transfers are still subject to state and local laws.

RECOMMENDED ACTION:

One Reading	Yes
Two Readings	No
Three Readings	No
Emergency	Yes
Suspension of Rules	Yes

If emergency or suspension of the rules, why the request?
Recommended approval as an emergency with suspension of the rules. The emergency clause is necessary in order to remain in compliance with the Ohio Revised Code, allow for the daily operations of the City of Brunswick to continue without interruptions and to keep the budget as up-to-date as possible in order to provide accurate accountability to the City's financial readers and interested parties.

ADDITIONAL INFORMATION:

CITY OF BRUNSWICK, OHIO
ORDINANCE NO. 44-19

By: Mrs. Hanek, Mr. Ousley and Mr. Delsanter

AN EMERGENCY ORDINANCE AMENDING ORDINANCES #89-18 AND #20-19 TO INCLUDE AMENDMENTS TO THE APPROPRIATION BUDGET FOR THE YEAR ENDING DECEMBER 31, 2019 AS INCORPORATED IN EXHIBIT "A" ATTACHED HERETO.

WHEREAS: Ordinance #89-18 adopted appropriations for 2019; and Ordinance #20-19, regarding amendments to the 2019 appropriation budget, were previously adopted by Council; and

WHEREAS: "Exhibit A" reflects the appropriations as required by the Ohio Revised Code Section 5705.38(C); and

WHEREAS: The amendments are described in detail and attached hereto as "Exhibit B" for informational purposes only; and

WHEREAS: In order to properly budget in accordance with State law for expenditures presently anticipated it is necessary to amend Ordinances #89-18 and #20-19.

WHEREAS: THE COUNCIL OF THE CITY OF BRUNSWICK HEREBY ORDAINS:

SECTION 1: Ordinances #89-18 and #20-19 are hereby amended to reflect the appropriations as attached hereto and incorporated herein as Exhibit "A."

SECTION 2: That this Ordinance is hereby declared to be an emergency measure immediately necessary for the preservation of the public health, safety and welfare, and for the usual daily operation of a municipal government and for the additional reason that Council wishes to maintain accurate appropriations. Therefore, the same shall be in full force and effect from and after its passage by the required number of votes.

PASSED: 1st Reading __

RULES SUSPENDED: AYES ____ NAYS ____

ADOPTED: _____AYES ____ NAYS ____

ATTEST: _____
Clerk of Council
Fijabi Julien-Gallam, CMC

EXHIBIT A

June 24, 2019

Fund Number	Fund Name / Department	Personal Service	Other	Total
General Fund				
001	General Fund			
	City Council	169,031.00	86,331.00	$ 255,362.00
	Mayor	95,241.00	90,524.00	$ 185,765.00
	City Manager	179,463.00	144,922.00	$ 324,385.00
	Information Technologies	158,683.00	338,349.00	$ 497,032.00
	Engineering	22,665.00	315,951.00	$ 338,616.00
	Building Department	318,982.00	239,503.00	$ 558,485.00
	Cemetery Maintenance	-	20,150.00	$ 20,150.00
	Janitorial Contract	-	21,627.00	$ 21,627.00
	City Hall Building & Grounds	16,950.00	54,515.00	$ 71,465.00
	Administrative Services	121,153.00	87,235.00	$ 208,388.00
	Economic Development	105,737.00	241,631.80	$ 347,368.80
	Animal Control	71,591.00	66,669.00	$ 138,260.00
	Law Department	178,787.00	277,719.00	$ 456,506.00
	Finance Department	239,470.00	217,773.00	$ 457,243.00
	Income Tax Department	188,518.00	210,759.00	$ 399,277.00
	Parks & Recreation Director	86,980.00	64,973.00	$ 151,953.00
	General Fund Administration	-	1,038,000.00	$ 1,038,000.00
	Planning Division/Community Development	46,714.00	31,526.00	$ 78,240.00
	Board of Building Appeals	388.00	1,206.00	$ 1,594.00
	Board of Zoning Appeals	2,724.00	5,895.00	$ 8,619.00
	Board of Civil Service	13,723.00	25,840.00	$ 39,563.00
	Board of Ethics	3,040.00	2,375.00	$ 5,415.00
	Board of Commemorative Affairs	-	21,500.00	$ 21,500.00
	General Fund Transfers / Advances	-	19,854,703.17	$ 19,854,703.17
001	Total General Fund	$ 2,002,625.00	$ 22,814,311.00	$ 25,479,516.97
Special Revenue Funds:				
110	Court Computerization Fund	10,011.00	17,690.00	$ 27,701.00
111	FEMA Grant Fund	-	168,688.00	$ 168,688.00
114	Police Fund	4,209,923.00	4,294,261.04	$ 8,504,184.04
115	Fire Fund	2,342,940.00	2,764,248.66	$ 5,107,188.66
117	Street Repair & Maintenance Fund	1,119,506.00	2,223,209.73	$ 3,342,715.73
118	State Highway Fund	-	153,535.94	$ 153,535.94
119	Law Enforcement Fund	-	1,000.00	$ 1,000.00
120	Brunswick Transit Alternative (BTA) Fund	-	53,000.00	$ 53,000.00
121	RLF / CDBG Fund	-	5.51	$ 5.51
123	Brunswick Area Television (BAT) Fund	135,476.00	220,427.00	$ 355,903.00
127	Parks Fund	210,081.00	415,215.00	$ 625,296.00
129	Department of Justice Federal Grant Fund	-	61,870.34	$ 61,870.34
130	DUI Enforcement & Education Fund	-	7,000.00	$ 7,000.00
131	Recreation Center Fund	469,523.00	694,815.00	$ 1,164,338.00
133	Home Improvement Grant Fund (CDBG)	-	14,020.40	$ 14,020.40
Enterprise Funds:				
223	Refuse Fund	64,009.00	2,663,538.00	$ 2,727,547.00
224	Storm Water Management Fund	29,962.00	1,847,741.04	$ 1,877,703.04
Capital Improvement Funds:				
300	General Permanent Improvement Fund	-	332,550.00	$ 332,550.00
332	Road Levy Fund	-	2,709,720.47	$ 2,709,720.47
333	Road Improvement Fund	-	3,397,465.03	$ 3,397,465.03
334	Traffic Control Fund	-	-	$ -
335	Public Square Fund	-	-	$ -
336	City Building Improvement Fund	-	408,502.74	$ 408,502.74

337	EPA Grant Fund	-	400,000.00	$	400,000.00
339	Fire Improvement Fund	-	-	$	-
341	Park Improvement Fund	-	78,500.00	$	78,500.00
347	North Carpenter Road Improvement Fund	-	10,141,618.79	$	10,141,618.79
348	Boston Road Improvement Fund	-	93,519.24	$	93,519.24
360	Brunswick Lake Improvement Fund	-	40,575.00	$	40,575.00
367	OPWC Hadcock Rd Reconstruction Fund	-	-	$	-
368	OPWC Grafton Road Improvement Fund	-	657,046.38	$	657,046.38
369	OPWC Center Road Resurfacing Fund	-	-	$	-
370	OPWC Multi Roads Improvement Fund	-	799,682.96	$	799,682.96
371	OPWC Laurel Road Improvement Fund	-	1,227,600.00	$	1,227,600.00
Self Insurance Fund:					
600	Self Insurance Fund	-	3,011,360.00	$	3,011,360.00
Debt Service Funds:					
771	General Obligation Bond Retirement Fund	-	-	$	-
780	Special Assessment BRF: Grafton Phase III	-	567.91	$	567.91
781	Special Assessment BRF: South Industrial Parkway	-	108,125.00	$	108,125.00
782	Special Assessment BRF: Laurel Road (2006)	-	43,337.50	$	43,337.50
783	Special Assessment BRF: Brunswick Lake - Dam	-	18,948.79	$	18,948.79
784	Special Assessment BRF: Brunswick Lake - Dredging	-	11,826.19	$	11,826.19
Agency Funds:					
881	General Trust Agency Fund	-	938,399.00	$	938,399.00
882	Unclaimed Money Agency Fund	-	20,000.00	$	20,000.00
885	Flexible Spending Agency Fund	-	160,000.00	$	160,000.00
886	Non-Residential 3% Building Permit Agency Fund	-	10,000.00	$	10,000.00
887	Residential 1% Building Permit Agency Fund	-	10,000.00	$	10,000.00
			Grand Total	$	74,290,558.63

City of Brunswick, Finance Office

"Exhibit B" : Schedule of Amendments to the Permanent Budget #2 - For informational purposes only

For the Budget Year Ending December 31, 2019

6/24/2019

Fund Name / Account Name	Account Number	Appropriation Adjustment Amount	Description
General (#001)			
ARCHITECT REVIEW	001-0430-54263	22,674.00	Architect fees collected for the new middle school project and was not included in original budget proposal. Request to add to conduct service.
PURCHASED SERVICES/CEMETERY MAINT	001-0440-54260	3,400.00	Westview Cemetery monument leveling.
PROFESSIONAL SERVICES - LAW	001-0600-54233	25,000.00	Various legal matters that have taken place since original budget compiled that was not anticipated.
ADVANCE OUT TO EPA GRANT FUND #337	001-0999-99886	200,000.00	To advance funds to the EPA Grant Fund to cover $200,000 in recycle cart costs until reimbursements are received from the Ohio EPA.
ADVANCE OUT TO DOJ GRANT FUND #129	001-0999-99892	24,377.70	To advance funds to the DOJ Grant Fund to cover two JAG Grant awards until reimbursed for the federal portion. Sub grant award letters received by the Division of Police for radios and evidence room software for Police.
General Fund Total		**275,451.70**	
Police Fund (#114)			
GRANT MATCH - POLICE CAPITAL	961-0520-56254	4,547.50	25% grant match requirement listed on the JAG Grant Subgrant award for evidence room software for the Division of Police.
Police Fund Total		**4,547.50**	
Fire Fund (#115/952)			
TRANSFER OUT TO CAPITAL SUBFUND #952	115-0510-99999	85,000.00	Set aside EMS revenues collected for the purchase of new radios to improve communication and sync up with the Division of Police's radio project.
CAPITAL OUTLAY	952-0510-56252	85,000.00	Purchase of 37 radios in conjunction with the Division of Police replacement of radios project.
Fire Fund Total		**170,000.00**	
Street R & M Fund (#117)			
CONSTRUCTION - ROADWAYS	117-0420-56881	308,468.23	Appropriation to match 92.5% of the 2019 revised gas tax increase from ODOT for the City of Brunswick's share (Fund #117 only).
Street R & M Fund Total		**308,468.23**	
State Highway Fund (#118)			
TRAFFIC CONTROL MAINTENANCE	118-0419-54257	25,010.94	Appropriation to match 7.5% of the 2019 revised gas tax increase from ODOT for the City of Brunswick's share (Fund #118 only).
Total State Highway Fund (#118)		**25,010.94**	
DOJ Federal Grant Fund (#129)			
JAG GRANT - RADIOS	129-0544-56256	10,735.20	JAG Grant Federal portion listed in the subgrant award (2015-JG-A02-6712A) dated March 26, 2019.
JAG GRANT - EVIDENCE ROOM SOFTWARE	129-0544-56257	13,642.50	JAG Grant Federal portion listed in the subgrant award (2015-JG-A02-6712) dated April 16, 2019.
ADVANCE OUT	129-0999-80185	24,377.70	To return any advance funds back to the General Fund once reimbursements of federal JAG Grant dollars are recived.
DOJ Federal Grant Fund Total		**48,755.40**	
Refuse Fund (#223)			
CONTRACTED REFUSE COLLECTION SERVICES	223-0710-54260	(200,000.00)	Reallocate appropriations from the Refuse Fund to the EPA Grant Fund as a result of City receiving Ohio EPA Grant in the amount of $200,000.
Total Refuse Fund		**(200,000.00)**	
Capital Projects Improvement Fund (#300)			
PROPERTY ACQUISITION	300-0522-56000	(135,000.00)	The Parks & Recreation Director has requested that this project be delayed and considered for the 2020 budget. Timing and costs are under review.
Capital Projects Improvement Fund Total		**(135,000.00)**	
EPA Grant Fund (#337)			
RECYCLE CART GRANT (Grant Portion Only)	337-2019-56800	200,000.00	City successful obtaining a $200,000 grant from the Ohio EPA to help subsidize the costs of the recycle grant. Reduce Refuse appropriations by $200,000
ADVANCE OUT TO GF	337-9999-80185	200,000.00	Return advance back to the General Fund once grant is completed and the City receives grant reimbursement.
Total EPA Grant Fund		**400,000.00**	

THE CITY OF BRUNSWICK

PROPOSED LEGISLATION

DATE: 6/24/2019

TO: Vice Mayor Michael Abella Jr. and Members of City Council

FROM: Carl S. DeForest, City Manager
Paul Barnett

COPY: Mayor Ron Falconi

LEGISLATION: **RES. NO. 45-19** - An emergency resolution ratifying the actions of the City Manager in executing the 2019 Community and Litter Grant agreement with the Ohio Environmental Protection Agency. - **1st Reading** (To be brought from Committee-of-the-Whole, *Administration/Paul Barnett*)

BACKGROUND: A motion was passed on December 17, 2018 authorizing the City Manager to apply for a grant from OEPA for the purchase of recycle carts for the planned curbside recycle program. The City received the formal notification dated June 7, 2019, that we were successful in obtaining the grant in an amount of $200,000. This notification was received on June 10, 2019 with a deadline to sign and return the grant agreement by June 17, 2019. The City Manager complied with the deadline by signing the agreement. The remaining costs of the recycle carts will be paid from the Refuse Fund #223.

PURPOSE AND EXPLANATION: The action of the City Manager in signing the agreement will allow the City to receive $200,000 from OEPA for the purchase of recycle carts for the proposed curbside recycle program.

IMPLEMENTATION SCHEDULE: Adopt on June 24, 2019 as an emergency with suspension of the rules.

FINANCIAL INFORMATION: OEPA Grant - - EPA Grant Fund #337 - 337-2019-56800 - - 200000

FINANCIAL SUMMARY: The Ohio EPA Grant portion will be accounted for, received and paid from the EPA Grant Fund #337. All remaining recycle cart costs not covered by the grant proceeds will be paid from Refuse Fund #223 and is included in the cost of the City's refuse hauler contract.

RECOMMENDED ACTION:

One Reading	Yes
Two Readings	No
Three Readings	No
Emergency	Yes

Suspension of Rules Yes

If emergency or suspension of the rules, why the request?
This is an emergency with suspension in order to ratify the actions of the City Manager.

ADDITIONAL INFORMATION:

Ohio Environmental Protection Agency

2019 Community and Litter Grant Agreement

This Agreement is made and entered into by and between the Director of the Ohio Environmental Protection Agency, hereinafter referred to as the **Agency**, and the City of Brunswick, hereinafter referred to as the **Grantee**.

WITNESSETH THAT:

WHEREAS the Grantee, as authorized under Ohio Revised Code (ORC) Chapter 3736, has applied to the Agency for program funding to implement a 2019 Community and Litter Grant, hereinafter referred to as the 2019 CLG; and

WHEREAS ORC 3736.05 authorizes the Director, to make grants from the recycling and litter prevention fund created in ORC 3736.03. ORC 3736.05 further authorizes the Director to enter into this agreement; and

WHEREAS the Grantee agrees to perform in compliance with the terms, promises, conditions, and assurances as outlined in the Grantee's 2019 CLG Grant Manual and the 2019 CLG Application, a copy of which is attached hereto as Exhibit A and incorporated herein by reference as if fully set forth herein; and

WHEREAS the 2019 CLG funds in the amount of **$ 200,000.00** have been encumbered. Obligations of the State of Ohio are subject to the provisions of ORC Section 126.07.

NOW THEREFORE, in consideration of the mutual covenants by and between the parties hereto, the parties agree as follows:

I. The Agency hereby awards to the Grantee a grant not to exceed **$ 200,000.00,** for the purpose of implementing the project detailed in the Grantee's application. Costs incurred by the Grantee for items that are not part of the approved budget as contained in the Grantee's application, or costs in excess of amounts specified in the approved budget as contained in the Grantee's application will not be reimbursed by the Agency. Any grant-related expenditures made prior to the effective date of the grant agreement will not be reimbursed. The Grantee agrees to maintain and expend the match funds required, either (1) in the dollar amount set forth in the Funding Request Details specified in the Grantee's application as "Match Funds Required", or (2) if the grant award is reduced, when reconciling the grant account at closeout as a result of reduced actual costs, then the dollar amount of the Grantee's match funds required may be proportionately reduced.

II. The Agency shall pay to the Grantee, subject to cash availability, fifty percent (50%) of its total grant award, to be used for project costs according to the Grantee's approved budget as contained in the Grantee's application. A final payment of fifty percent (50%) of the grant award will be withheld to reconcile the grant account at the end of the grant period or the closeout of the grant. The parties understand and agree that all payments made under this grant award are based on actual costs and are made based upon Grantee's satisfactory performance of Grantee's obligations under this grant agreement.

III. **Nondiscrimination:** The Grantee shall not discriminate against any employee or applicant for employment because of race, color, religion, national origin, ancestry, age, sex, sexual orientation, military status, or any disability as defined in the Americans with Disabilities Act (ADA). The Grantee shall not, in any manner, discriminate, intimidate or retaliate against any employee on account of race, color, religion, sex, sexual orientation, military status, national origin, disability, age or ancestry. The Grantee shall take affirmative action to ensure that employees are treated during employment, without regard to their race, color, religion, national origin, ancestry, age, sex, sexual orientation, military status, or any disability, as defined in the ADA. Such action shall include, but is not limited to, the following: employment, upgrading, demotion, or transfer; recruitment or recruitment advertising; layoff or termination, including apprenticeship.

IV. **Drug-Free:** The Grantee agrees to comply with all applicable federal, state and local laws regarding smoke-free and drug-free work places and shall make a good faith effort to ensure that none of its employees or permitted subcontractors engaged in the work being performed hereunder purchase, transfer, use, or possess illegal drugs or alcohol, or abuse prescription drugs in any way. The Grantee agrees to post in conspicuous places, available to employees and applicants for employment, notices to be provided by

the Agency setting forth the provisions of this nondiscrimination clause. Furthermore, the Grantee agrees to comply with all pertinent provisions of ORC Section 125.111, 4112.02, and the Drug Free Workplace Act.

V. The Grantee shall, in all solicitations or advertisements for employees placed by or on behalf of the Grantee, state that all qualified applicants will receive consideration for employment without regard to race, color, religion, national origin, ancestry, age, sex, sexual orientation, military status, or any disability, as defined in the ADA.

VI. The Grantee shall comply with the State Equal Employment Opportunity guidelines, and any direction as set forth by officials or agencies of the State or Federal Government that seek to eliminate unlawful employment discrimination, and with all other State and Federal efforts to assure equal employment practices under this Agreement. Before and during performance, the Grantee shall promptly comply with all requests and direction from the State of Ohio or any of its officials and agencies.

VII. Upon the Grantee's noncompliance with the nondiscrimination clauses of this Agreement, this Agreement may be canceled, terminated or suspended in whole or in part, and the Grantee may be ineligible for further state contracts and such other sanctions may be imposed and remedies instituted as otherwise provided by the law.

VIII. It is fully understood and agreed that neither Grantee nor any of its employees or other personnel shall at any time or for any purpose, be considered as agents or employees of the Ohio EPA or the State of Ohio. The Grantee certifies that neither the Grantee nor its employees or other personnel are public employees of the Agency under federal or state law for tax, Workers' Compensation, and retirement deduction purposes.

IX. Compliance Assurance: The Grantee shall carry out and administer the project according to all applicable federal, state, and local laws, rules, regulations, ordinances and the terms of this Agreement, as outlined in the Agency's 2019 CLG Application and Grant Manual.

X. The Agency shall at any reasonable time have the right of access to and the right to audit all books and records, financial or otherwise, pertinent to the administration and operation of this project. The Grantee shall keep said books and records in a manner consistent with generally accepted accounting procedures in a common file to facilitate audits and inspections. In the event of a special audit, the Grantee will be responsible for the actual cost of the audit. Said costs shall be determined by the State of Ohio.

XI. The Grantee by signature on this document, certifies that it: (1) has reviewed and understands the Ohio ethics and conflict of interest laws, including the requirements found in Ohio Revised Code Chapter 102 and in Ohio Revised Code Sections 2921.42 and 2921.43, and (2) Grantee is currently in compliance with and will continue to adhere to, the requirements of Ohio ethics laws and conflict of interest laws and will take no action inconsistent with those laws. The Grantee understands that failure to comply with Ohio's ethics and conflict of interest laws is, in itself, grounds for termination of this Agreement and may result in the loss of other contracts or grants with the State of Ohio. No personnel of Contractor or public official, employee or member of the governing body of any locality in which work under this Agreement is being carried out, and who exercises any functions or responsibilities in connection with the review or approval of this Agreement or carrying out of any such work, shall, prior to the completion of the work, voluntarily acquire any personal interest that is incompatible or in conflict with the discharge and fulfillment of his or her functions and responsibilities with respect to the carrying out the work. Any such person who acquires an incompatible or conflicting personal interest on or after the effective date of this Agreement, or who involuntarily acquires any such personal interest, shall immediately disclose his or her interest to Ohio EPA in writing. Thereafter, he or she shall not participate in any action affecting the work under this Agreement, unless Ohio EPA determines in its sole discretion that, in the light of the personal interest disclosed, his or her participation in any such action would not be contrary to public interest.

XII. The Grantee affirms that, as applicable to it, no party listed in Division (I) or (J) of Section 3517.13 of the Ohio Revised Code or spouse of such party has made, as an individual, within the two previous calendar years, one or more contributions in excess of the amounts specified in ORC 3517.13, to the Governor or to his campaign committees.

XIII. The Grantee affirmatively represents and warrants to Agency that it is not subject to a

finding for recovery under ORC 9.24 or otherwise qualifies under that section. The Grantee agrees that if this representation or warranty is deemed to be false, the Agreement shall be void *ab initio* as between the parties to this Agreement, and any funds paid by Agency hereunder immediately shall be repaid to Agency, or an action for recovery immediately may be commenced by Agency for recovery of said funds. The Grantee affirmatively represents and warrants to Agency that it is not debarred from consideration for contract awards by the Director of the Department of Administrative Services, pursuant to either ORC 153.02 or ORC 125.25. If this representation and warranty is false, this Agreement is void *ab initio* and Grantee shall immediately repay to the State any funds paid under this Agreement.

XIV. Implementation of the approved 2019 CLG project as outlined in the Grantee's 2019 CLG Approved Application and this Agreement shall not commence until the Agreement is signed by all parties or **July 1, 2019**, whichever is later. The Agency shall not be responsible for any costs incurred by the Grantee prior to the effective date of this Agreement.

XV. Grantee represents and warrants that:

1. It is not subject to any judgment or decree of a court of competent jurisdiction or governmental agency that would limit or restrict its right to enter and carry out this Agreement.

2. Neither the execution of this Agreement nor the consummation of its transactions will constitute a breach under any contract or agreement to which it is a party or by which it is bound.

3. It has made no false statements to the other party or any of its employees or agents in the process of obtaining this Agreement

4. It has the authority to execute this Agreement and perform their obligations under this Agreement.

5. It has received no written notice that any investigation, action or litigation is pending or threatened, which materially and adversely affects this Agreement.

XVI. This Agreement shall remain in effect until **June 30, 2020**. The Agency reserves the right, at any time after execution of this Agreement, and with or without cause, to terminate, revise, or extend the grant in whole or in part, upon written notification to the Grantee. The Grantee, upon receipt of notice of termination, shall not incur any new obligations and shall take all necessary and appropriate steps to limit disbursements and minimize costs and obligations, including cancelling as many outstanding obligations as possible. In the event of such termination, the Grantee will be paid for approved expenditures incurred prior to termination and for any noncancelable obligations properly incurred by the Grantee prior to termination. If requested by the Agency, the Grantee shall promptly furnish a report that describes the status of all work under this Agreement as of the date of receipt of the termination notice. The Grantee agrees to waive any right to, and shall no claim for, additional compensation against the Agency by reason of such termination.

XVII. The Grantee reserves the right, at any time after execution of this Agreement to terminate the program, in whole or in part, upon a thirty (30) day written notification to the Agency. In the event of such termination by the Grantee, the Grantee shall not incur any new obligations and shall make a good faith effort to cancel as many outstanding obligations as possible.

XVIII. All unspent funds and unallowed expenditures shall be returned to the Agency within forty-five (45) days of receiving notification of any termination of the grant or program. Any payment not received within forty-five days of the due date may be turned over to the Attorney General for collection as a delinquent claim, and the Grantee agrees to pay the Agency all costs the Agency incurs for delinquent collections by the Attorney General's office.

XIX. The Grantee affirms to have read and understands Executive Order 2019-12D issued by Ohio Governor Mike DeWine, sign and complete the Standard Affirmation and Disclosure Form (Exhibit B) and shall abide by those requirements in the performance of this Agreement and perform no services required under this Agreement outside of

the United States. Notwithstanding any other terms of this agreement, the State reserves the right to recover any funds paid for services the Contractor performs outside of the United States for which it did not receive a waiver. The State does not waive any other rights and remedies provided to the State in this contract. The Executive Order is provided as an attachment (Exhibit C) and also is available at the following website: https://governor.ohio.gov/wps/portal/gov/governor/media/executive-orders/2019-12d

The Grantee also affirms, understands, and agrees to immediately notify the State of any change or shift in the location(s) of services performed by the Grantee or its subcontractors under this Agreement, and no services shall be changed or shifted to a location(s) that are outside of the United States.

If the Grantee or any of its subcontractors perform services under this Agreement outside of the United States, the performance of such services shall be treated as a material breach of the Agreement. The State is not obligated to pay and shall not pay for such services. If Grantee or any of its subcontractors perform any such services, Grantee shall immediately return to the State all funds paid for those services. The State may also recover from the Grantee all costs associated with any corrective action the State may undertake, including but not limited to an audit or a risk analysis, as a result of the Grantee performing services outside the United States.

The State may, at any time after the breach, terminate the Agreement, upon written notice to the Grantee. The State may recover all accounting, administrative, legal and other expenses reasonably necessary for the preparation of the termination of the Agreement and costs associated with the acquisition of substitute services from a third party.

The State, in its sole discretion, may provide written notice to Grantee of a breach and permit the Grantee to cure the breach. Such cure period shall be no longer than 21 calendar days. During the cure period, the State may buy substitute services from a third party and recover from the Grantee any costs associated with acquiring those substitute services.

Notwithstanding the State permitting a period of time to cure the breach or the Grantee's cure of the breach, the State does not waive any of its rights and remedies provided the State in this Agreement, including but not limited to recovery of funds paid for services the Grantee performed outside of the United States, costs associated with corrective action, or liquidated damages.

XX. Until termination of this contract (expiration date – see condition XV) and for a period of three years following termination, the **Agency** may require repayment of any funds, up to the full amount that has been distributed, upon a finding by the Director that **Grantee** or the cooperating enterprise is not in substantial compliance with environmental laws or rules or has become subject to a formal enforcement action by Ohio EPA or the Ohio Attorney General's Office. If the **Agency** terminates this agreement pursuant to this paragraph, any funds already distributed to Grantee, including funds that have already been spent, shall be returned to the **Agency** within forty-five (45) days of receiving notification of termination. Any payment not received within forty-five days of the due date may be referred to the Ohio Attorney General's Office for collection as a delinquent claim, and the Grantee agrees to pay the Agency all costs the Agency incurs for delinquent collections by the Ohio Attorney General's Office. Grantee shall require all contracts with subcontractors to include legal mechanisms (e.g., default judgments or liens) to recover funds pursuant to this paragraph.

XXI. Neither this Agreement, nor any rights, duties, nor obligations hereunder, may be assigned, delegated, or transferred in whole or in part by the Grantee without prior written consent of the State. Any assignment or delegation not consented to may be deemed void by the State. This Agreement represents the complete and final agreement between the Parties and supersedes any previous writing or understanding.

XXII. Each party shall be responsible for its own acts and omissions and will be responsible for any and all damages, costs, and expenses that arise out of the performance of this Agreement and that are due to that party's own negligence, tortious acts, or other conduct or that are due to the negligence, tortious acts, or other conduct of the party's respective agents, officers, or employees.

Ohio Environmental Protection Agency

The effective date of this Agreement is the date when the Director of the Ohio Environmental Protection Agency signs this Agreement, or **July 1, 2019**, whichever date is later.

IN WITNESS WHEREOF, the parties hereto have caused this Agreement to be executed by their duly authorized officers.

Grantee: **City of Brunswick**
Award: **$ 200,000.00**

(I, we) have the authority to sign this Agreement and do so in (my/our) respective capacities:

Grantee Signature

Signed: _____ **Date:** 6/13/19

Authorized Official: Carl DeForest, City Manager
City of Brunswick

Ohio Environmental Protection Agency Signature

Signed: _____ **Date:** _____

Laurie A. Stevenson, Director
Ohio Environmental Protection Agency

THE CITY OF BRUNSWICK

PROPOSED MOTION

DATE: 12/17/2018

TO: Vice Mayor Michael Abella Jr. and Members of City Council

FROM: Carl S. DeForest, City Manager
Paul Barnett

COPY: Mayor Ron Falconi

MOTION: Motion authorizing the City Manager to apply for a grant from OEPA for purchase of recycle carts or the planned start of curbside recycling in 2019.

BACKGROUND: Brunswick is planning on starting a curbside recycling program in summer of 2019. Currently, Brunswick does not offer a curbside recycling program and OEPA is offering grants for Cities that are adding curbside recycling.

PURPOSE AND EXPLANATION: This motion will allow for the City Manager to apply for a grant from OEPA for the purchase of recycle carts to offset the costs that will be charged to the residents.

IMPLEMENTATION SCHEDULE: Applications for this grant are due by February 1, 2019.

FINANCIAL INFORMATION: OEPA grant for purchase of recycle carts - - Revenue of $200,000.00 - - -

FINANCIAL SUMMARY: Application will be the maximum allowed or $200,000.00

RECOMMENDED ACTION: Passage of a motion which authorizes the City Manager to apply for a grant for the purchase of recycle carts.

ADDITIONAL INFORMATION:

Ohio Environmental Protection Agency

Mike DeWine, Governor
Jon Husted, Lt. Governor
Laurie A. Stevenson, Director

June 7, 2019

Paul Barnett
City of Brunswick
4095 Center Road
Brunswick, OH 44212

RE: Recycle Ohio Grant (ROG) – 2019 Awards

Dear Mr. Barnett:

Congratulations, your 2019 Community and Litter Grant application is approved for funding. The Ohio Recycling and Litter Prevention grant program benefits Ohio's environment and economy through projects that reduce the negative impact of waste streams and supports businesses working in and/or directly benefiting from recycling markets.

Enclosed are 2 copies of the grant agreement that **must** be signed by the grantee, and the Ohio Environmental Protection Agency. In addition, the grantee must complete and sign the Ohio Department of Administrative Services, Affirmation and Disclosure Form. As part of the grant process and in response to Executive Order 2019-12D, the grantee through the Affirmation and Disclosure Form agrees that they will not perform services requested under the grant agreement outside of the United States.

Your responsibilities in this process are to ensure the following:

1. All appropriate local officials carefully review the entire agreement;

2. The authorized official designated in the application signs and dates each agreement along with the Department of Administrative Services, Affirmation and Disclosure Form, original signatures (no signature stamps or copies); and

3. Return all documents (both original agreements and the Department of Administrative Services, Affirmation and Disclosure Form) to the address below by **June 17, 2019.**

   Ohio Environmental Protection Agency
   Attn: Marie Barnett, Grants Administrator
   Division of Environmental & Financial Assistance
   P.O. Box 1049
   Columbus, OH 43216-1049

4. **Grantees are required to attend the mandatory grant administration meeting to review the operational and reporting requirements established by the agency.** This meeting must be attended by at least one representative of the entity receiving grant funds. At this meeting you will receive an original copy of the fully executed agreement.

The meeting will be held at the following location and time:

June 20, 2019
10:00 AM – 12:00 Noon
Ohio Department of Transportation
(Lower Level Auditorium)
1980 West Broad Street
Columbus, Ohio 43223

If you have any questions, please contact Marie Barnett, Grants Administrator, at marie.barnett@epa.ohio.gov, or by calling (614) 705-1019.

Sincerely,

Laurie A. Stevenson

Laurie A. Stevenson, Director
Ohio Environmental Protection Agency

DEPARTMENT OF ADMINISTRATIVE SERVICES

STANDARD AFFIRMATION AND DISCLOSURE FORM

EXECUTIVE ORDER

Governing the Expenditure of Public Funds on Offshore Services

All of the following provisions must be included in all invitations to bid, requests for proposals, state term schedules, multiple award contracts, requests for quotations, informal quotations, and statements of work. This information is to be submitted as part of the response to any of the procurement methods listed.

CONTRACTOR/SUBCONTRACTOR AFFIRMATION AND DISCLOSURE:

By the signature affixed to this response, the Bidder/Offeror affirms, understands and will abide by the requirements of Executive Order 2019-20D. If awarded a contract, the Bidder/Offeror becomes the Contractor and affirms that both the Contractor and any of its subcontractors shall perform no services requested under this Contract outside of the United States.

The Bidder/Offeror shall provide all the name(s) and location(s) where services under this Contract will be performed in the spaces provided below or by attachment. Failure to provide this information may subject the Bidder/Offeror to sanctions, termination or a damages assessment. If the Bidder/Offeror will not be using subcontractors, indicate "Not Applicable" in the appropriate spaces.

SAMPLE

1. Principal location of business of Contractor: **XYZ Organization**

   1234 State Street, Ste 100 (Address) — **Columbus, Ohio 43215** (City, State, Zip)

   Name/Principal location of business of subcontractor(s):

   _____ (Name) — _____ (Address, City, State, Zip)

   _____ (Name) — _____ (Address, City, State, Zip)

2. Location where services will be performed by Contractor: **XYZ Organization**

   1234 State Street, Ste 100 (Address) — **Columbus, Ohio 43215** (City, State, Zip)

   Name/Location where services will be performed by subcontractor(s):

   _____ (Name) — _____ (Address, City, State, Zip)

(Name) (Address, City, State, Zip)

3. Location where state data will be stored, accessed, tested, maintained or backed-up, by Contractor:

(Address) (Address, City, State, Zip)

Name/Location(s) where state data will be stored, accessed, tested, maintained or backed-up by subcontractor(s):

(Name) (Address, City, State, Zip)

(Name) (Address, City, State, Zip)

(Name) (Address, City, State, Zip)

(Name) (Address, City, State, Zip)

(Name) (Address, City, State, Zip)

SAMPLE

4. Location where services to be performed will be changed or shifted by Contractor:

(Address) (Address, City, State, Zip)

Name/Location(s) where services will be changed or shifted to be performed by subcontractor(s):

(Name) (Address, City, State, Zip)

(Name) (Address, City, State, Zip)

(Name) (Address, City, State, Zip)

(Name) (Address, City, State, Zip)

(Name) (Address, City, State, Zip)

MIKE DEWINE
GOVERNOR
STATE OF OHIO

Executive Order 2019-12D

Governing the Expenditure of Public Funds for Offshore Services

WHEREAS, the retention and creation of jobs in the State of Ohio is fundamental to the future prosperity of all Ohioans: and

WHEREAS, the use of public funds for services provided outside the United States potentially undermines economic development; and

WHEREAS, it shall be the policy of my Administration to prohibit the expenditure of public funds for services provided outside the United States;

NOW THEREFORE, I, Mike DeWine, Governor of the State of Ohio, by virtue of the authority vested in me by the Constitution and laws of this State do hereby order and direct that:

1. No State Cabinet Agency, Board or Commission ("Executive Agency") shall enter into any contract which uses any funds within its control to purchase services which will be provided outside the United States. This Executive Order applies to all purchases of services made directly by an Executive Agency and services provided by subcontractors of those providing services purchased by an Executive Agency.

2. This Executive Order will be personally provided, by the Director, Chair or other chief executive official of each Executive Agency, to the Chief Procurement Officer or other individual at that entity responsible for contracts for services.

3. The Department of Administrative Services, through Ohio's Chief Procurement Officer, shall continue to maintain procedures to ensure all of the following:

   a. All agency procurement officers (APOs), or the person with equivalent duties at each Executive Agency, have standard language in all Executive Agency contracts which:

      i. Reflect this Order's prohibition on the purchase of offshore services.
      ii. Require service providers or prospective service providers to:

         1. Affirm that they understand and will abide by the requirements of this Order.
         2. Disclose the location(s) where all services will be performed by any contractor or subcontractor.

3. Disclose the location(s) where any State data associated with any of the services they are providing, or seek to provide, will be accessed, tested, maintained, backed-up or stored.
4. Disclose any shift in the location of any services being provided by the contractor or any subcontractor.
5. Disclose the principal location of business for the contractor and all subcontractors who are supplying services to the State under the proposed contracts

b. All APOs confirm that all quotations, statements of work, and other such proposals for services affirm this Order's prohibition on the purchase of offshore services and include all of this Order's disclosure requirements.

i. Any such proposal for services lacking the affirmation and disclosure requirements of the Order will not be considered.
ii. Any such proposal where the performance of services is proposed to be provided at a location outside the United States by the contractor or any subcontractor will not be considered.

c. All procurement manuals, directives, policies, and procedures reflect the requirements of this Order.

d. All APOs have adequate training which addresses the terms of this Order.

4. Nothing in this Order is intended to contradict any State or federal law. In addition, this Order does not apply to:

a. Services necessary to support the efforts to attract jobs and business to Ohio;

b. Academic, instructional, educational, research or other services necessary to support the international missions of Ohio's public colleges and universities; or

c. Situations in which the Director of the Department of Administrative Services, or the Director's designee, shall determine that it is an emergency or that it is necessary for the State to waive some or all of the requirements of this Order. The Director shall establish standards by which Executive Agencies may request a waiver of some or all of the requirements of this Order and by which such requests will be evaluated and may be granted.

I signed this Executive Order on March 4, 2019 in Columbus, Ohio and it will expire ten (10) calendar days after my last day as Governor of Ohio unless rescinded before then.

Mike DeWine, Governor

ATTEST:

Frank LaRose, Secretary of State

2019 Grant Manual

Recycling and Litter Prevention Program

Recycle Ohio
Ohio Environmental Protection Agency

Ohio Environmental Protection Agency
Laurie A. Stevenson, Director

Ohio Environmental Protection Agency

DEFA - Recycling & Litter Prevention Program
Contact Information

Marie Barnett, Grants Administrator
marie.barnett@epa.ohio.gov Phone: 614-705-1019

Travis Limbert, Grants Coordinator
travis.limbert@epa.ohio.gov Phone: 614-644-2827

Katie Courtright, Supervisor
kathleen.courtright@epa.ohio.gov Phone 614-705-1147

Dave Foulkes, Environmental Specialist
david.foulkes@epa.ohio.gov Phone 614-644-3118

Kelsey Heyob, Environmental Specialist
kelsey.heyob@epa.ohio.gov Phone 614-705-1013

50 West Town Street, Suite 700
P.O. Box 1049
Columbus, Ohio 43216-1049

www.recycleohio.gov

Printed on recycled paper

TABLE OF CONTENTS

Introduction 1

Relationship of the Agency to the Grantee 1

Grant Administration 1
Accounting System 1
Audits 2
Contract/Sub-Grant Agreement 2
Separate Account 3
Matching Funds 3
Initial Payment 3
Close Out 4
Contracts, Purchases and Personnel Policies 4
Equipment and Site Improvement Disposition 4
Site Visits, Assistance and Meetings 5
Advertising Policies 5

Record Keeping 6

Final Reports 6

Timetable of Reports 7

Final Report Forms 8–16

INTRODUCTION

This manual will serve as your guide for managing your Ohio Environmental Protection Agency (Agency) Recycling and Litter Prevention grant. The manual provides specific policies in effect to administer the grant project. Although these policies address all management requirements, the Agency reserves the right to make exceptions to these requirements when circumstances warrant.

As part of all grant agreements, this manual is to be used in conjunction with the following documents:

- Original Application Package
- Grant Agreement (contract)

Any individuals involved with or responsible for managing the grant program should be familiar with the above documents. By signing the grant agreement, the grantee agrees to follow all policies and procedures in this manual.

RELATIONSHIP OF THE AGENCY TO THE GRANTEE

The Grantee is required to designate an authorized official to administer the grant. The Grantee and Cooperating Enterprise are required to sign all documents and is directly responsible for the overall grant. Grantees/Cooperating Enterprises will follow all policies and procedures in this manual, maintain fiscal and program accountability and ensure that no grant expenditures exceed the budgeted amounts. At no time will the total amount of a grant be increased.

GRANT ADMINISTRATION

Accounting System

The Grantee must use an accounting system that complies with "generally accepted accounting principles." Grantees must record the receipt of funds by type and source, and the expenditure of funds by approved line items. Local government accounting systems that comply with standards and procedures published by Ohio's state auditor will meet the Agency's accounting standards. The accounting system must provide a timely and accurate record of transactions and must produce reports that correspond with appropriate receipts and disbursements, the expended and unexpended balance for each line item, invoices, proof of payment (voided checks, credit card statements, Auditor's reports, etc.) and the total funds expended and the unexpended.

Audits

Grant-related financial records of Grantees/Cooperating Enterprises are subject to Agency, state, and local government audits and must be maintained for a period of **six years** after the grant close out. Audits may result in adjustments to the amount of reimbursement and may require repayment to the Agency of any improperly expended or unaccounted grant funds. In the event of a special audit, the Grantee/Cooperating Enterprise will be responsible for the actual cost of the audit. The Agency, in conjunction with the auditor's office will determine said

costs. The auditors will require review of, but not limited to, the following information while on official audits:

- All purchase orders, invoices, proof of payment documents and vouchers that involve grant and matching funds
- Listing of equipment purchased with grant and matching funds
- Internal accounting ledgers and/or journals showing grant and matching expenditures
- A chart of accounts that identifies the fund and/or account from which grant and matching expenditures are made
- Copies of all reports required by this grant manual and the grant agreement

The Agency in conjunction with the auditor's office will on an annual basis, perform risk assessments that identify grantees requiring an audit in the coming year. If the original intent of the grant is not satisfied, or if multiple infractions exist, these actions could raise the risk assigned to your organization and result in such an audit. Therefore, it is imperative that all grants be conducted in compliance with grant guidance, all eligible grant expenditures are supported by documentation, and the original intent of the grant is sufficiently satisfied.

Contract/Sub-Grant Agreement

The Grantee is required to enter into a contract with any approved contractor to sub-grant grant funds for eligible purposes, as identified in the approved budget. The Grantee is required to ensure that contracts or sub-grants awarded for the establishment of project-related facilities by a contractor include provisions, guaranteeing the availability of suitable land or property, in or on which to operate. In addition, the Grantee/Cooperating Enterprise must obtain any necessary licenses, permits or inspections required by a governmental agency. The property must be maintained in compliance with all directives given by health, safety or fire officials, resulting from regular or special inspections by those agencies. In addition, the Grantee/Cooperating Enterprise must maintain sufficient insurance on any property for which grant funds have been expended to improve the property site, or to help re-establish the physical plant of the operation in case of fire, theft or other destructive occurrence. The Grantee/Cooperating Enterprise must maintain insurance in an amount sufficient to cover the replacement value of any grant-funded equipment. For Market Development Grants (MDG) and Scrap Tire Grants (STG), this section applies to both the Grantee and the Cooperating Enterprise. MDG and STG Grantees and Cooperating Enterprises shall submit all appropriate financial documents, including shipping and receipt documents, invoices, proof of payment documents, contracts and term reports, prior to the transfer of any grant funds.

Separate Account

ORC Section 3736.03 and the grant agreement require all Grantees to create and maintain a separate account for grant funds received, and cash donations (ORC Section 5733.064) received for their grant program. This separate account must remain open throughout the effective dates of the grant agreement and during whatever additional time is necessary to close out all charges and payments related to the grant.

All interest earned on the separate account must be deposited into the same account. These monies will be used to support recycling or litter prevention projects and may be used any time during or after the effective date of the grant award. Monies generated from any grant-funded activity are not required to be deposited into the separate account. The Grantee must document all cash donations received for the grant project as to the amount, name, and address of the donor, and the date each donation was received. The Grantee must use cash donations received for tax credit purposes pursuant to ORC Section 5733.064 for any purpose identified under ORC Section 3736.02, and in a manner consistent with the same. The donations may be used any time on or after the effective date of the grant award.

Matching Funds

Community and Litter Grant (CLG) projects require a financial contribution equal to twenty five percent (25%) match of the grant award. Matching funds for CLG projects must be a cash contribution directly related to the project. Matching funds will be accounted for in the same manner as grant funds.

Market Development Grant (MDG) projects require a financial contribution equal to one hundred percent (100%) match of the grant award. The match must be a cash contribution or line of credit dedicated to the funded project. Matching funds will be accounted for in the same manner as grant funds.

Scrap Tire Grants (STG) projects require a financial contribution equal to one hundred percent (100%) match of the grant award. The match must be a cash contribution or line of credit dedicated to the funded project. Matching funds will be accounted for in the same manner as grant funds.

Initial Payment

Upon approval of the grant agreement and subject to cash availability, the agency provides each grantee with an initial electronic payment to cover approved grant expenses. In projects involving a Cooperating Enterprise, the initial payment shall be held by the Grantee and not forwarded to the Cooperating Enterprise until all expenditures have been completed and the appropriate invoices and proof of payment is documented. A final payment will be withheld to reconcile the grant account at the end of the grant period or at the close-out of the grant. In addition, any grant-related expenditure made prior to the effective date of the grant agreement will not be reimbursed.

Close Out

Grants will be closed out after the Agency receives and approves the completed final report and has an opportunity to witness the project equipment in operation. The maximum grant period for the CLG is 12 months. The maximum grant period for the MDG and STG is 24 months; however, the Grantee may request to fiscally close out the grant earlier than the deadline established in the executed grant agreement. The close out request requires submission of all Agency grant close out reports. The final report is due no later than 45 days after the grant expiration date.

Following submission and approval of the completed final report, the Agency will authorize a final electronic payment for the grantee. If the initial electronic payment exceeded the total

grant project expenditures, a final payment will not be issued and unused grant funds must be returned to the Agency within 45 days of close out notification, or the Agency may forward the matter to the Ohio Attorney General's Office for collection services. Checks submitted to the Agency should be made payable to "Treasurer, State of Ohio".

For Community and Litter Grants, if the total grant project expenditures equal a lesser amount than what was proposed in the budget, the match may be proportionately reduced. Grantees may calculate the match required for a project with reduced actual costs using the following formula:

Grant + Match = Total Project Cost

Total Project Cost/1.25 = Grant Funds, then Total Project – Grant Funds = Match

For Market Development and Scrap Tire Grants, if the total project expenditures equal a lesser amount than what was proposed in the budget, the dollar amount of the Grantee's match funds required may be reduced to the equivalent of the reduced grant funds.

Close Out Reports are requested in electronic format and may be submitted to recycle@epa.ohio.gov

Contracts, Purchases and Personnel Policies

The Grantee will abide by its local procurement regulations or standards for contract agreements, provided that the standards set forth in the grant agreement are followed. A written agreement is required between the Grantee and the service provider where personal services greater than $1,000 (one thousand dollars) will be paid for with grant funds. The written agreement will be fully executed before the provision of any service, and a copy will be retained in the Grantee's financial records for audit purposes.

Grant funds will not, without prior written approval from the agency, be obligated after the termination date of the grant. In addition, grant funds will not be used to supplant or to replace any existing funding for grant projects.

Equipment and Site Improvement Disposition

The Grantee/Cooperating Enterprise will maintain records reflecting each purchase made by the Grantee/Cooperating Enterprise for a piece of equipment costing more than $300 acquired through this grant. During the three-year period from the date the Grantee/Cooperating Enterprise expends $3,000 or more of grant funds to purchase any equipment or on-site improvements, the Grantee/Cooperating Enterprise will not change the original approved use of the equipment, without obtaining prior written approval of the Agency. The Grantee/Cooperating Enterprise may not transfer the equipment to another party as a gift without cost. The Grantee/Cooperating Enterprise may not sell the equipment acquired through this grant, except with the written approval of the Agency. During the three-year period, the Grantee/Cooperating Enterprise must obtain written approval from the Agency, prior to making any change to the equipment, transferring the equipment to another person or entity, or selling the equipment to another person or entity, if that equipment was obtained through this grant. Any request for such approval must contain the rationale and basis for the proposed change, transfer or sale. If the Grantee/Cooperating Enterprise obtains approval and sells a piece of equipment originally acquired through this Grant during the three-year period,

the Grantee shall reimburse the Agency with the proceeds of the sale up to the amount of the cost of the piece of equipment. The Grantee/Cooperating Enterprise shall submit checks to the Agency made payable to *"Treasurer State of Ohio"*, and send the check to the same address as provided in this manual for the submittal of reports within forty-five (45) days of the approved sale of the equipment in accordance with the following schedule:

1. Within one year of the date the Grantee/Cooperating Enterprise received the equipment or site improvement, the Grantee/Cooperating Enterprise will repay to the Agency **ninety percent (90%)** of any expended funds granted by the Agency for the originally approved purchase of the equipment or site improvement.

2. During the second year after the date the Grantee/Cooperating Enterprise received the equipment or site improvement, the Grantee/Cooperating Enterprise will repay to the Agency **seventy percent (70%)** of any expended funds granted by the Agency for the originally approved purchase of the equipment or site improvement.

3. During the third year after the date the Grantee/Cooperating Enterprise received the equipment or site improvement, the Grantee/Cooperating Enterprise will repay to the Agency **fifty percent (50%)** of any expended funds granted by the Agency for the originally approved purchase of the equipment or site improvement.

4. Following the third year after the date the Grantee/Cooperating Enterprise received the equipment, the Grantee/Cooperating Enterprise may dispose of the equipment in a manner consistent with local regulations and without the approval of the Agency.

Enhanced Assistance: Compliance Check and Site Visits

Prior to release of grant funds, staff will perform a review of Agency records to ensure the Grantee/Cooperating Enterprise is compliant with all applicable rules and regulations. Release of grant funds may be withheld if the compliance check identifies any issue(s).

Agency staff may visit the Grantee/Cooperating Enterprise during the grant period and up to three years thereafter. These site visits will be scheduled in advance and provide the Agency with knowledge of the Grantee's/Cooperating Enterprise's progress toward meeting project objectives.

Enhance Assistance site visits will help ensure compliance with current facility operations; provide the grant recipient with the compliance assistance they may need to operate in an environmentally acceptable manner. In addition, site visits allow staff to observe how grant funded activities promote recycling in Ohio and use this information for programmatic improvements and developing priorities.

Advertising Policies

Content Standards: Content will be in good taste. Nudity, sexual suggestion and derogatory references to persons based on sex, ethnicity, religion, color, creed or handicap are prohibited. Materials will positively reflect on the grantee and the Agency. Content will not threaten individual freedoms. Copyrighted and trademarked material cannot be used without written permission from the owner. A funding credit line (FCL) is a statement that explicitly gives funding credit to certain parties. If no local contribution is made, no funding credit will be given

to the grantee, their local officials or donors. Funding credit may be given to both parties when the Agency and the grantee share the project cost. Any advertising that does not meet the requirements of the Advertising Policy will not be reimbursed.

Note: *The Agency will not reimburse the expenditure of grant funds to support advertising that incorporates quotes or names of any individual(s) running for office or for any political purposes.*

The following funding credit line or Ohio EPA logo will be used on all advertising such as billboards, tabloid-style inserts and standard print journal advertising. This FCL will also appear on other printed materials such as brochures, flyers, newsletters, pamphlets, posters, etc.

Recycle Ohio
Ohio Environmental Protection Agency

Funded by the Ohio Environmental Protection Agency

RECORD KEEPING

Both Grantees/Cooperating Enterprises must maintain adequate records in the format prescribed in this grant manual. Such records must document all allowable expenses. The Grantee will monitor and report project performance for all grant-supported projects to assure that projects are accomplished, and funds are properly expended. Maintaining accurate and comprehensive records is considered part of the grant application review criteria and can positively or negatively affect future grant funding for communities and their Cooperating Enterprises.

FINAL REPORTS

Each grant has a set of final reports that are found at the end of this manual. Grantees/Cooperating Enterprises should make sure that the appropriate grant summary is completed for each individual grant. After the final report is processed and approved, the Agency provides each grantee with a letter stating the effective date of the approved report.

Project Summary

The Project Summary lists the accomplishments of the Grantee/Cooperating Enterprise and updates the status of a grant per the original application. This should include any pre-approved project and budget modifications.

Recycling Activity Materials Summary

The Recycling Activity Materials Summary includes project-specific questions regarding pounds of materials collected for recycling, and pounds of materials utilized in a manufacturing process.

Financial Summary

The Financial Summary identifies expenditures toward approved projects. The Agency approves or disapproves expenditures according to the approved grant budget. The official

project budget figures can be found in the Grantee's original grant application. All final report documents must be submitted even if no expenses were incurred during a particular year.

Equipment Summary

The Cooperating Enterprise must provide to the Grantee an Equipment Summary report that lists each piece of equipment purchased in full, or in part, with grant funds that costs $300 or more. The Grantee will submit the Equipment Summary included in the final report to Ohio EPA.

Advertising Attachments

Grantees must attach copies of all grant-funded advertisement, including printed advertising/material and scripts of all radio advertising, in the final report.

TIMETABLE OF REPORTS

Grant/Final Reports	Reporting Period Covered	Due Dates
Community and Litter Grant	July 1, 2019 – June 30, 2020	Aug. 15, 2020
Market Development Grant & Scrap Tire Grant	July 1, 2019 – June 30, 2021	Aug. 15, 2021

Grantees may submit Final Reports electronically to recycle@epa.ohio.gov or a via mail to:

Ohio Environmental Protection Agency

DEFA - Recycling & Litter Prevention
Attention: Kelsey Heyob
50 West Town Street, Suite 700
P.O. Box 1049
Columbus, Ohio 43216-1049

Recycle Ohio
Ohio Environmental Protection Agency

Close Out Report

Grantee:
Cooperating Enterprise:
Grant Year: 2019
Grant Type:
Fund Number (Ohio EPA Only):
Date Submitted:

Total Grant Award	=	$
Total Match Committed	=	$
Initial Grant Payment	=	$
Total Grant Expended	=	$
Total Match Expended	=	$
Total Project Cost	=	$
Amount Due to Grantee	=	$
Amount Due to Ohio EPA	=	$

Check One:

☐ **According to the records submitted and attached, the grantee is eligible to receive and should be issued payment in the amount of $_____**

☐ **According to the records submitted and attached, the grantee is to issue payment to Ohio EPA made payable to Treasurer State of Ohio in the amount of $_____**

Proof of payments and invoices are required (e.g. credit card, copy of canceled check, P.O.) Grantees will list each piece of equipment purchased in full, or in part, with grant funds that costs $300 or more. Include the listed information for each piece of equipment. Attach proof of payments and invoices.

Final Report Submitted by Signature Date

(Ohio EPA Only) Grants Administrator Signature Date

(Ohio EPA Only) Environmental Supervisor Signature Date

FINAL REPORT
Project Summary Form

Grantee: _____ Date: _____

Cooperating Enterprise: _____

Grant Type: _____

Project Goals and Objectives:

Market Impact: Since your grant award, describe the progress, success, failure, etc., related to your project. Describe how it may have impacted material markets in Ohio.

Location and Physical Plant: Describe any site improvements made during this reporting period. List any equipment purchased or installed. Describe any project-related problems with the location or facility.

Project Marketing: Describe any activities that have been conducted to promote or increase the awareness of the project.

Additional Information or Comments: If needed, please use this space to record any additional information that is pertinent to the project or provide comments or suggestions.

FINAL REPORT
Project Summary Form

Grantee: _____ Date: _____

Cooperating Enterprise: _____

Grant Type: _____

Advertisement:

Type of Advertising	Number of Units	Cost Per Unit	Match Funds Spent	Grant Funds Spent	Total Cost
Brochure					
Newspaper					
Posters					
Radio					
Other:					
Totals					

Please attach copies to the Final Report of all grant-funded advertisement, including printed advertising/material and scripts of all radio advertising.

FINAL REPORT
Materials Summary Form

Grantee: _____ Date: _____

Cooperating Enterprise: _____

Grant Type: _____

Materials Collected	**Tons Collected** *(through the grant-funded activity)*
Appliances	
Carpet & Padding	
Commingled Material	
Construction & Demolition Debris	
Deconstruction Material	
Glass	
Electronics	
Mattresses	
Metals – Ferrous	
Metals – Non-Ferrous	
Organic (food) Material	
Paint	
Paper - Cardboard (OCC)	
Paper – All Other	
Plastics	
Scrap Tires	
Wood – non-C&DD material	
Other -	
Other -	
Totals:	

FINAL REPORT
Financial Summary Form

Grantee: _____ Date: _____

Cooperating Enterprise: _____

Grant Type: _____

Project Type:		**Grant Funds Spent:**	**Match Funds Spent:**
Equipment: *(provide brief description of purchases)*		$	$
Other: *(provide brief description of purchases)*		$	$
Personal Services Contract: *(provide brief description of services)*		$	$
Total		$	$

FINAL REPORT
Equipment Summary Form

Grantee: _____ Date: _____

Cooperating Enterprise: _____

Grant Type: _____

All grantees will list each piece of equipment purchased in full, or in part, with grant funds that costs $300 or more. Include the listed information for each piece of equipment. Attach proof of payments and invoices.

Equipment Type:		Model Year:
Model #:		Delivery Date:
Serial / ID #:		Grant Year Obtained:
Equipment Location:		
Total Grant Spent: $	Total Match Spent: $	Total Spent: $
Equipment Type:		Model Year:
Model #:		Delivery Date:
Serial / ID #:		Grant Year Obtained:
Equipment Location:		
Total Grant Spent: $	Total Match Spent: $	Total Spent: $
Equipment Type:		Model Year:
Model #:		Delivery Date:
Serial / ID #:		Grant Year Obtained:
Equipment Location:		
Total Grant Spent: $	Total Match Spent: $	Total Spent: $
Equipment Type:		Model Year:
Model #:		Delivery Date:
Serial / ID #:		Grant Year Obtained:
Equipment Location:		
Total Grant Spent: $	Total Match Spent: $	Total Spent: $

DATA SUMMARY FORM (CLG GRANT ONLY)

Grantee:

County:

Cleanup Areas (Indicate total number)

Roadsides		**Parks**	
Playgrounds		**Waterways**	
Streets/sidewalks		**Public land/vacant lots**	

Cleanups Summary (Indicate total amounts)

Miles of streets/highways/trails		**Number of junk cars**	
Miles of rivers/lakes/shore		**Number of tires collected**	
Number of illegal dumpsites		**Pounds of recyclables collected**	
Bags of litter/debris collected		**Number of communities**	

Media/Education Summary (Indicate total number)

Ads purchased with grant funds		**Number of education presentations**	
Ads donated		**Number of education participants**	
News articles		**Facebook/Twitter hits**	
Printed materials			

Cleanup Volunteers/Community Investment Summary (Indicate total number or cash value)

Number of volunteers		**Donated goods/services/contributions**	
Number of hours worked		**Government/department/agency costs**	
Total value of volunteer hours using federal minimum wage of $7.25/hr.			

MATERIALS SUMMARY FORM (MARKET DEVELOPMENT ONLY)

Grantee: _____ Date: _____

Cooperating Enterprise: _____

Grant Type: _____

Material Specification	*Tons of Material Per Year*	*Percent Increase in Operation's Use of Material*
	TPY	%
	TPY	%
	TPY	%
	TPY	%
	TPY	%
	TPY	%

Number of jobs created: _____

Number of jobs retained: _____

MATERIALS SUMMARY FORM (SCRAP TIRE GRANT ONLY)

Grantee: _____ Date: _____

Cooperating Enterprise: _____

Grant Type: _____

Scrap Tire Material Specification	*Tons of Material Per Year*	*Percent Increase in Operation's Use of Material*
	TPY	%
	TPY	%
	TPY	%
	TPY	%
	TPY	%
	TPY	%

Number of jobs created: _____

Number of jobs retained: _____

What to return:

Sign date, and return ***all copies of the 2019 Grant Agreement*** along with the
Department of Administrative Services
Affirmation and Disclosure Form (sample enclosed).
(Original signatures are required, no signature stamps or copies)

Please return no later than **June 17, 2019**

Mail to:
Ohio Environmental Protection Agency
Division of Environmental & Financial Assistance
Marie Barnett, Grant Administrator
P.O. Box 1049
Columbus, Ohio 43215-1049

AFFIRMATION AND DISCLOSURE FORM

By the signature affixed hereto, the Contractor affirms and understands that if awarded a contract, both the Contractor and any of its subcontractors shall perform no services requested under this Contract outside of the United States, nor allow State data to be sent, taken, accessed, tested, maintained, backed-up, stored or made available remotely (located) outside of the United States.

The Contractor shall provide all the name(s) and location(s) where services under this Contract will be performed and where data is located in the spaces provided below or by attachment. Failure to provide this information may result in no award. If the Contractor will not be using subcontractors, indicate "Not Applicable" in the appropriate spaces.

1. Principal location of business of Contractor:

   _____ _____
   (Address) (City, State, Zip)

   Name/Principal location of business of subcontractor(s):

   _____ _____
   (Name) (Address, City, State, Zip)

   _____ _____
   (Name) (Address, City, State, Zip)

2. Location where services will be performed by Contractor:

   _____ _____
   (Address) (City, State, Zip)

   Name/Location where services will be performed by subcontractor(s):

   _____ _____
   (Name) (Address, City, State, Zip)

   _____ _____
   (Name) (Address, City, State, Zip)

3. Location where state data will be located, by Contractor:

(Address)	(Address, City, State, Zip)

Name/Location(s) where state data will be located by subcontractor(s):

(Name)	(Address, City, State, Zip)
(Name)	(Address, City, State, Zip)
(Name)	(Address, City, State, Zip)
(Name)	(Address, City, State, Zip)
(Name)	(Address, City, State, Zip)

Contractor also affirms, understands and agrees that Contractor and its subcontractors are under a duty to disclose to the State any change or shift in location of services performed by Contractor or its subcontractors before, during and after execution of any Contract with the State. Contractor agrees it shall so notify the State immediately of any such change or shift in location of its services. The State has the right to immediately terminate the contract, unless a duly signed waiver from the State has been attained by the Contractor to perform the services outside the United States.

On behalf of the Contractor, I acknowledge that I am duly authorized to execute this Affirmation and Disclosure Form and have read and understand that this form is a part of any Contract that Contractor may enter into with the State and is incorporated therein.

By: _____
Contractor

Print Name: _____

Title: _____

Date: _____

CITY OF BRUNSWICK, OHIO
RESOLUTION NO. _____

BY:

AN EMERGENCY RESOLUTION RATIFYING THE ACTIONS OF THE CITY MANAGER IN EXECUTING THE 2019 COMMUNITY AND LITTER GRANT AGREEMENT WITH THE OHIO ENVIRONMENTAL PROTECTION AGENCY.

WHEREAS: On December 17, 2018, City Council adopted a Motion authorizing the City Manager to apply for a grant from the Ohio Environmental Protection Agency ("OEPA") in the amount of $200,000.00 (the "Grant") for the purchase of recycling carts for implementation of a curbside recycling collection program in the City;

WHEREAS: On June 10, 2019, the City received formal notification from the OEPA that the City was awarded the Grant in the amount of $200,000.00 and advising that the 2019 Community and Litter Grant Agreement (the "Agreement") must be executed and returned to the OEPA by June 17, 2019; and

WHEREAS: The City Manager executed the Agreement and timely returned same to the OEPA to ensure receipt of the Grant.

WHEREAS: THE COUNCIL OF THE CITY OF BRUNSWICK HEREBY RESOLVES:

SECTION 1: That the actions of the City Manager in executing the Agreement and timely returning same to the OEPA to ensure receipt of the Grant is hereby ratified.

SECTION 2: That this Resolution is hereby declared to be an emergency measure necessary for the immediate preservation of the public peace, property, health, safety or welfare, and for the additional reason that immediate passage is necessary to ratify the actions of the City Manager. Therefore, the same shall be in full force and effect from and after its passage by the required number of votes or from the earliest time allowed by law.

PASSED: 1st Reading_____

Rules Suspended: AYES _____ NAYS _____

ADOPTED: _____ AYES _____ NAYS _____

ATTEST: _____
Clerk of Council
Fijabi Julien-Gallam, CMC

CITY OF BRUNSWICK, OHIO
RESOLUTION NO. 45-19

BY: Committee-of-the-Whole

AN EMERGENCY RESOLUTION RATIFYING THE ACTIONS OF THE CITY MANAGER IN EXECUTING THE 2019 COMMUNITY AND LITTER GRANT AGREEMENT WITH THE OHIO ENVIRONMENTAL PROTECTION AGENCY.

WHEREAS: On December 17, 2018, City Council adopted a Motion authorizing the City Manager to apply for a grant from the Ohio Environmental Protection Agency ("OEPA") in the amount of $200,000.00 (the "Grant") for the purchase of recycling carts for implementation of a curbside recycling collection program in the City;

WHEREAS: On June 10, 2019, the City received formal notification from the OEPA that the City was awarded the Grant in the amount of $200,000.00 and advising that the 2019 Community and Litter Grant Agreement (the "Agreement") must be executed and returned to the OEPA by June 17, 2019; and

WHEREAS: The City Manager executed the Agreement and timely returned same to the OEPA to ensure receipt of the Grant.

WHEREAS: THE COUNCIL OF THE CITY OF BRUNSWICK HEREBY RESOLVES:

SECTION 1: That the actions of the City Manager in executing the Agreement and timely returning same to the OEPA to ensure receipt of the Grant is hereby ratified.

SECTION 2: That this Resolution is hereby declared to be an emergency measure necessary for the immediate preservation of the public peace, property, health, safety or welfare, and for the additional reason that immediate passage is necessary to ratify the actions of the City Manager. Therefore, the same shall be in full force and effect from and after its passage by the required number of votes or from the earliest time allowed by law.

PASSED: 1st Reading_____

Rules Suspended: AYES _____ NAYS _____

ADOPTED: _____ AYES _____ NAYS _____

ATTEST: _____
Clerk of Council
Fijabi Julien-Gallam, CMC

THE CITY OF BRUNSWICK

PROPOSED LEGISLATION

DATE: 6/24/2019

TO: Vice Mayor Michael Abella Jr. and Members of City Council

FROM: Carl S. DeForest, City Manager
Paul Barnett

COPY: Mayor Ron Falconi

LEGISLATION: **RES. NO. 46-19** - A resolution authorizing direct payment to Melway Paving Company, INC. for the city's proportionate share of the Laurel Road and South Carpenter Road Resurfacing Project. - **1st Reading** (To be brought from Services, Utilities, Technology & Cable Committee, *Administration/Paul Barnett*)

BACKGROUND: Resolution 102-18 was passed pledging cooperation with the Medina County Engineer and Brunswick Hills Township for the resurfacing of Laurel Road and South Carpenter Road in an amount not to exceed $120,000. Both of these roadways share frontage in the City of Brunswick and also Brunswick Hills Township. The Medina County Engineer prepared the bid package, bid the work, opened the bids and prepared the bid tabulation. There were five(5) bidders and Brunswick Hills entered into contract with the lowest and best bidder, Melway Paving Company. Brunswick Hills Township will oversee the construction and process paperwork. Brunswick Hills has requested that the City of Brunswick, after construction is complete and inspected, pay the contractor directly for the City of Brunswick portion of the project.

The City also anticipates needing an additional $10,000 for engineering coordination costs but will be covered under the engineering contract and is budgeted separately.

PURPOSE AND EXPLANATION: The purpose of this project is to cooperate with Brunswick Hills Township to provide a safe and smooth driving surface on two(2) roadways that both communities share responsibility for the roadway surface.

IMPLEMENTATION SCHEDULE: Construction is anticipated to begin in July, 2019.

FINANCIAL INFORMATION:

FINANCIAL SUMMARY: The estimated construction costs for the City of Brunswick's portion are not estimated to exceed $120,000. Eligible and approved costs will be paid from the City's Road Improvement Fund #333. Payment will occur after the construction is complete and the Township and contractor approve and agree on quantities. The City will work with the Township to sign off on the quality of work and will agree to the final approval of work before any payment will occur.

RECOMMENDED ACTION:

One Reading	No
Two Readings	No
Three Readings	Yes
Emergency	No
Suspension of Rules	No

If emergency or suspension of the rules, why the request?

ADDITIONAL INFORMATION:

5 bidders
rounding
~~101,724.~~

BID TAB OF QUOTES 3-21-2019 2019 BRUNSWICK HILLS TOWNSHIP ROAD BID BRUNSWICK HILLS TOWNSHIP MEDINA COUNTY, OHIO	ENGINEER'S ESTIMATE		MELWAY PAVING CO. 7571 STATE ROUTE 83 HOLMESVILLE, OHIO 44633		KOKOSING CONST. 1539 LOWELL STREET ELYRIA, OHIO 44035		KARVO PAVING CO. 4524 HUDSON DR. STOW, OHIO 44224		CROSSROADS ASPHALT 13421 HAWKE ROAD COLUMBIA STATION OHIO, 44028		BARBICAS CONST. CO. 124 DARROW RD. STE.1 AKRON, OH 44305		
DESCRIPTION	UNIT COST	TOTAL	UNIT COST	TOTAL	UNIT COST	TOTAL	UNIT COST	TOTAL	UNIT COST	TOTAL	UNIT COST	TOTAL	AVERAGE UNIT COST
PROPOSAL NO. 1 – T.H. 138 LAUREL ROAD (W.130TH TO CITY LIMITS)													
SS-1 Bit. Tack Coat @ 0.1 Gals/S.Y.	$2.94	$2,731.26	$2.00	$1,858.00	$1.97	$1,830.13	$1.90	$1,765.10	$3.00	$2,787.00	$2.50	$2,322.50	$2.27
2" County Spec (CS) Intermediate Course	$78.75	$65,047.50	$75.00	$61,950.00	$81.00	$66,906.00	$79.50	$65,667.00	$85.00	$70,210.00	$85.00	$70,210.00	$81.10
No. 9 Limestone Choke	$52.50	$2,415.00	$19.00	$874.00	$57.00	$2,622.00	$45.00	$2,070.00	$63.00	$2,898.00	$60.00	$2,760.00	$48.80
Temp. Yellow Center Line, Type 2 (CS402 Course)	$420.00	$315.00	$400.00	$300.00	$200.00	$150.00	$425.00	$318.75	$1,200.00	$900.00	$2,440.00	$1,830.00	$933.00
#8 ACBF Slag Cover Aggr.	$73.50	$6,835.50	$80.00	$7,440.00	$110.00	$10,230.00	$73.86	$6,868.98	$70.00	$6,510.00	$73.00	$6,789.00	$81.37
CRS-2 Bit. Latex Mod. Seal Coat	$2.73	$13,944.84	$2.20	$11,237.60	$2.90	$14,813.20	$2.52	$12,872.16	$2.70	$13,791.60	$2.50	$12,770.00	$2.56
2' Berming Using No.411 Limestone	$39.90	$11,172.00	$30.00	$8,400.00	$16.50	$4,620.00	$34.00	$9,520.00	$30.00	$8,400.00	$35.00	$9,800.00	$29.10
Water Based Yellow Center Line, Type 1	$844.00	$633.00	$2,560.00	$1,920.00	$1,800.00	$1,350.00	$2,545.00	$1,908.75	$1,800.00	$1,350.00	$2,500.00	$1,875.00	$2,241.00
Water Based White Edge Line, Type 1	$630.00	$951.30	$2,045.00	$3,087.95	$600.00	$906.00	$2,029.00	$3,063.79	$600.00	$906.00	$2,000.00	$3,020.00	$1,454.80
Water Based 24" White Stop Lines, Type 1	$21.00	$630.00	$11.90	$357.00	$4.00	$120.00	$28.00	$840.00	$4.00	$120.00	$10.00	$300.00	$11.58
Furnish & Install Survey Monuments	$950.00	$1,900.00	$555.00	$1,110.00	$600.00	$1,200.00	$774.12	$1,548.24	$410.00	$820.00	$600.00	$1,200.00	$587.82
Furnish & Maintain Vehicular Traffic Control	$14,340.00	$14,340.00	$3,190.00	$3,190.00	$3,120.00	$3,120.00	$5,000.00	$5,000.00	$4,630.00	$4,630.00	$6,000.00	$6,000.00	$4,388.00
Total Proposal No. 1		**$120,915.40**		**$101,724.55**		**$107,867.33**		**$111,442.77**		**$113,322.60**		**$118,876.50**	
O. 2 – T.H. 103 SOUTH CARPENTER ROAD (SLEEPY HOLLOW RD. TO LAUREL RD.)													
SS-1 Bit. Tack Coat @ 0.1 Gals/S.Y.	$2.94	$2,375.52	$2.00	$1,616.00	$1.97	$1,591.76	$2.24	$1,809.92	$3.00	$2,424.00	$2.50	$2,020.00	$2.34
2" County Spec (CS) Intermediate Course	$78.75	$56,621.25	$75.00	$53,925.00	$81.00	$58,239.00	$79.50	$57,160.50	$85.00	$61,115.00	$90.00	$64,710.00	$82.10
No. 9 Limestone Choke	$52.50	$2,100.00	$19.00	$760.00	$57.00	$2,280.00	$45.00	$1,800.00	$70.00	$2,800.00	$60.00	$2,400.00	$50.20
Temp. Yellow Center Line, Type 2 (CS402 Course)	$420.00	$277.20	$400.00	$264.00	$200.00	$132.00	$425.00	$280.50	$1,200.00	$792.00	$2,500.00	$1,650.00	$945.00
#8 ACBF Slag Cover Aggr.	$73.50	$5,953.50	$80.00	$6,480.00	$110.00	$8,910.00	$73.86	$5,982.66	$70.00	$5,670.00	$73.00	$5,913.00	$81.37
CRS-2 Bit. Latex Mod. Seal Coat	$2.73	$12,137.58	$2.20	$9,781.20	$2.90	$12,893.40	$2.52	$11,203.92	$2.70	$12,004.20	$2.50	$11,115.00	$2.56
2' Berming Using No.411 Limestone	$39.90	$9,735.60	$30.00	$7,320.00	$16.50	$4,026.00	$34.00	$8,296.00	$30.00	$7,320.00	$35.00	$8,540.00	$29.10
Water Based Yellow Center Line, Type 1	$844.00	$557.04	$2,560.00	$1,689.60	$1,800.00	$1,188.00	$2,545.00	$1,679.70	$1,800.00	$1,188.00	$2,500.00	$1,650.00	$2,241.00
Water Based White Edge Line, Type 1	$630.00	$831.60	$2,045.00	$2,699.40	$600.00	$792.00	$2,029.00	$2,678.28	$600.00	$792.00	$2,000.00	$2,640.00	$1,454.80
Furnish & Install Survey Monuments	$950.00	$950.00	$555.00	$555.00	$600.00	$600.00	$750.00	$750.00	$410.00	$410.00	$700.00	$700.00	$603.00
Furnish & Maintain Vehicular Traffic Control	$19,340.00	$19,340.00	$2,765.00	$2,765.00	$3,000.00	$3,000.00	$4,200.00	$4,200.00	$4,250.00	$4,250.00	$6,000.00	$6,000.00	$4,043.00
Total Proposal No. 2		**$110,879.29**		**$87,855.20**		**$93,652.16**		**$95,841.48**		**$98,765.20**		**$107,338.00**	
Grand Total Proposals No. 1-2		**$231,794.69**		**$189,579.75**		**$201,519.49**		**$207,284.25**		**$212,087.80**		**$226,214.50**	

EQUAL OPPORTUNITY EMPLOYER

AGREEMENT FOR COUNTY SPEC. 402 & ODOT ITEM 422

SINGLE CHIP AND SEAL WITH STIPULATED TRAFFIC CONTROL

2019 BRUNSWICK HILLS TOWNSHIP ROAD BID

This agreement made and entered into by and between the Board of Township Trustees, Brunswick Hills Township, 1918 Pearl Road, Brunswick, Ohio, 44212, hereinafter referred to as the "TOWNSHIP" and Melway Paving Company, Inc., 7571 State Route 83, Holmesville, Ohio, 44633, hereinafter referred to as the "CONTRACTOR."

WITNESSETH.

WHEREAS, the Township through the Office of the Medina County Engineer, did cause to be published in The Gazette, a newspaper of general circulation in Medina County, Ohio, on March 1, 2019, its Notice to Bidders inviting sealed bids for County Spec. 402 and ODOT Item 422 single chip and seal with stipulated traffic control; and

WHEREAS, in conformity with said Notice to Bidders, the Contractor did submit its bid to the Township; and

WHEREAS, by proper entry in its journal, the Township determined that the bid of the Contractor to be the lowest and best bid received, and did thereafter award the contract to the Contractor.

NOW, THEREFORE, in consideration of the mutual covenants contained herein the parties do agree as follows:

1. The Contractor agrees to furnish all specified materials, equipment, necessary labor and traffic control to perform all work required to complete the complete County Spec. 402 and ODOT Item 422 Single Chip and Seal with stipulated traffic control, according to Township specifications for the original bid sum of $189,579.75. Actual payment up to said maximum is to be an aggregate total determined by the work actually performed by the Contractor.

2. All work to be performed and all materials furnished by the Contractor shall be in reasonably close conformity with the lines, grades, cross-sections, dimensions, and material requirements shown on the plans or indicated in the specifications.

In the event the Medina County Engineer finds the materials or finished product in which the materials are used not within reasonably close conformity with the plans and specifications, but that reasonably acceptable work has been produced, the Township shall then make a determination if the work shall be accepted and remain in place. In this event the Township will document the basis of acceptance by contract modification which will provide for an appropriate adjustment in the contract price for such work or materials as the County Engineer deems necessary to conform to his determination, based on engineering judgement.

In the event the Medina County Engineer finds the materials or the finished product in which the materials are used or the work performed are not in reasonable conformity with the plans and specifications and have resulted in an inferior or unsatisfactory product, the work or materials shall be removed and replaced or otherwise corrected by, and at the expense of, the Contractor.

3. The Contractor will be responsible for initiating, maintaining and supervising all safety precautions and programs in connection with the work. He will take all necessary precautions for the safety of, and will provide the necessary protection to prevent damage, injury or loss to all employees from the work and other persons who may be affected thereby.

4. The Contractor will comply with all applicable laws, ordinances, rules,regulations and order of any public body having jurisdiction. He will erect and maintain as required by the conditions and progress of the work, all necessary safeguards for safety and protection.

5. The Contractor will supervise and direct the work. He will be solely responsible for the means, methods, techniques, sequences and procedures of construction.

6. The Contractor shall furnish, install and maintain all necessary barricades, construction signs, and other traffic control devices in accordance with the Manual of Uniform Traffic Control Devices. The Contractor shall take all necessary precautions for the protection of the work and the safety of the public.

7. The Contractor shall furnish flaggers, appropriately equipped and instructed, when required, to regulate the flow of vehicular traffic around and through the work.

8. Final payment made to the Contractor for work performed under this agreement shall be made within thirty (30) days from the date of completion or acceptance, whichever is later, by the Township. Acceptance by the Township may require a finding by the County Engineer that the project as completed has met all Township requirements.

9. Partial payments for work performed shall be made monthly at the rate of ninety-two percent (92%) of estimates prepared by the Contractor and approved by the Medina County Engineer. All labor performed after the job is fifty percent (50%) completed, shall be paid at one hundred percent (100%) of the estimates submitted by the Contractor and approved by the Medina County Engineer.

10. From the date the contract is fifty percent (50%) completed, as evidenced by payments in the amount of at least fifty percent (50%) of the contract, the retainage shall be deposited in the escrow account as set forth in paragraph 16.

11. When the major portion of the project is substantially completed and occupied or

in use, or otherwise accepted, and there exists no other reason to withhold retainage, the retained percentage held in connection with such project, shall be released from escrow and paid to the Contractor, withholding only that amount necessary to assure completion. Funds in the escrow account not heretofore paid, with accumulated interest, shall be paid to the Contractor thirty (30) days from the date of completion or acceptance by the Township.

12. Partial payment not to exceed ninety percent (90%) shall be allowed upon the written authorization of the County Engineer, upon such conditions as he prescribes, for material delivered safely in the vicinity of the project.

13. Contractor agrees that no subcontractor shall be utilized for work under this contract unless first approved in writing by the Township, who agrees such approval shall not unreasonably be withheld.

14. Any subcontractor employed under this agreement shall be required to comply with the completion date set forth herein, and his failure to so comply shall subject the Contractor to the penalty provided in paragraph 23 of this agreement.

15. The parties hereto designate the following bank or savings and loan association to act as escrow agent for the Contractor per Section 153.63 of the Ohio Revised Code, _____

_____.

16. Any money which is due the Contractor, shall be paid the Contractor on the date due, or if disputed, shall be deposited in such escrow account, along with all retainage after the contract is fifty percent (50%) completed.

17. The money so deposited shall be placed in a savings account, or the escrow agent shall properly invest all of the escrow principal in obligations selected by the escrow agent and approved by the Contractor and the Township, in writing.

18. The escrow agent designated herein, shall hold the escrow principal and income

until receipt of notice from the Township and the Contractor, or until receipt of an arbitration order specifying the amount of the escrow principal to be released and the person to whom it is to be released. Upon receipt of the notice or order, the agent shall promptly pay such amount of principal and proportionate amount of the escrow income to the person indicated.

19. The escrow shall be compensated for its services as agreed to by the Township and the Contractor from the income from the escrow account.

20. When the parties disagree as to the conditions under which money is to be paid, the parties shall apply for a decision by arbitration under the procedures of Chapter 2711 of the Ohio Revised Code. When application is made, neither party shall initiate and no court shall permit the maintenance of, an action in court for decision of the same issue sought to be determined in the arbitration. The award made by the arbitrator may include the cost of arbitration. The arbitration shall be binding on all parties.

21. If the money required to be paid, or deposited under the escrow provisions of this section is not paid to the Contractor, or deposited with an escrow agent, the Township shall pay the Contractor an amount equal to eight percent (8%) annual interest compounded daily.

22. The Contractor agrees to complete all work by September 13, 2019. If the work is not completed by the time herein fixed, the Township or it's agent shall thereafter keep an accurate account of all expenditures for inspection, supervision and all other similar technical services incurred in connection with the work after the expiration of the time fixed. The amount thereof shall be retained out of any sums due or to become due to the Contractor.

23. In addition, the parties agree that the Contractor shall pay liquidated damages to Brunswick Hills Township at the rate stated in State of Ohio Department of Transportation, "Construction and Material Specifications," 2016 Edition, Item 108.07, $400.00 per calendar day, to recover damages for delay only, for each day of delay not approved by the Township.

24. If, in the opinion of the Township, the Contractor has not commenced his work within a reasonable time, does not carry such work forward with reasonable progress, is improperly performing his work, or has abandoned or failed to complete the contract, the Township shall make a finding to the effect, and enter such finding on its journal, and so notify the Contractor, in writing, and the right of the Contractor to control and supervise the work shall immediately cease.

25. In such instance, the Township shall forthwith give written notice to the sureties on any bond of the Contractor of such action. If, within ten (10) days after receipt of such notice, such sureties or one or more of them notify the Township, in writing, of their intentions to enter upon and complete the work covered by such contract, such sureties shall be permitted to do so, and the Township shall allow them twenty (20) days after the receipt of such notice in writing from such sureties within which to enter upon the work and resume construction, unless the time is extended by the Township upon good cause shown.

26. If, after receiving notice of the action of the Township in terminating the contract of the Contractor over the work covered by this contract, the sureties on such Contractor's bond do not within ten (10) days give the Township the written notice provided for in this section, or having done so, fail to carry such work forward with reasonable progress or improperly perform, abandon, or fail to complete the work by such contract, the Township shall complete the work. The Township shall first advertise the work for letting as provided by law and the estimated cost at which the work shall be let shall be the difference between the original contract price and the amount paid to original Contractor, and a contract shall not be let at a price in excess of the amended estimate.

If no bids to complete the work are received, the Township shall cause that part of the work still uncompleted to be re-estimated, shall re-advertise it at the amended estimate and shall

not let the work for more than such re-estimate. If the estimated cost of completing the contract does not exceed FIFTEEN THOUSAND DOLLARS per mile, the Township may contract without bid, or complete by force account as set forth in the Ohio Revised Code.

27. Contractor agrees that in the hiring of employees for the performance of work under this contract, it shall pay the minimum wage in accordance with the Schedule of Prevailing Wage Rates ascertained and determined by the Ohio Department of Commerce, Division of Labor and Worker Safety, as applicable to Medina County, Ohio, in compliance with Section 4115.07 of the Ohio Revised Code.

28. Contractor further agrees to require in any subcontract granted for performance of any work required under this contract, compliance by the subcontractor with the minimum wage set forth in the Schedule of Prevailing Hourly Wage Rates ascertained and determined by the Ohio Department of Commerce, Division of Labor and Worker Safety, as applicable to Medina County, Ohio, in compliance with Section 4115.07 of the Ohio Revised Code.

29. Contractor agrees to provide Worker's Compensation coverage on all employees utilized on this job, or to see that such coverage is provided by any subcontractor utilized. Contractor further agrees to hold the Township harmless and to indemnify and defend the Township of Brunswick Hills, its trustees, officers, employees and agents against any claim for damages arising against them as a result of failure to provide such coverage.

30. Contractor further agrees in order to protect itself as well as the Township of Brunswick Hills under this agreement, that it shall provide to the Township upon request, proof of the coverage required herein.

31. Contractor still further agrees that in the hiring of employees for the performance of work under this contract, or any subcontract, that neither the Contractor, nor any subcontractor hired by him, or any person acting on their behalf, shall by reason of race, creed, sex, handicap,

color or military status as defined in Section 4112.01 of the Revised Code, discriminate against any citizen of the State in the employment of laborers and workers who are qualified and available to perform the work for which this contract relates; and further, neither the Contractor, nor any subcontractor employed by him, or any person on their behalf, shall in any manner, discriminate against, or intimidate any employee hired for the performance of work under this contract or any subcontract, on account of race, creed, sex, handicap, color or military status as defined in Section 4112.01 of the Revised Code.

32. Contractor agrees that there shall be deducted from the amount payable hereunder by the Township a forfeiture of TWENTY-FIVE DOLLARS for each person who is discriminated against or intimidated in violation of this contract; and that for any second or subsequent violation, this contract shall be canceled or terminated by the Township, and all money to become due hereunder may be forfeited.

33. The Contractor will indemnify and hold harmless the Township of Brunswick Hills, its trustees and the County Engineer and their agents and employees from and against all claims, damages, losses and expenses, including attorney fees arising out of or resulting from the performance of the work, provided that any such claims, damage, loss or expense is attributed to bodily injury, sickness, disease or death, or to injury to or destruction of tangible property including the loss of use resulting therefrom; and is caused in whole or in part by any negligent or willful act or omission of the Contractor or sub-contractor, anyone directly or indirectly employed by any of them or anyone for whose acts any of them may be liable.

The Contractor shall be fully responsible to the owner for the acts and omissions of his sub-contractors and of persons either directly or indirectly employed by them, as he is for the acts and omissions of persons directly employed by him.

34. Contractor further agrees that in order to protect himself, as well as the Township

of Brunswick Hills under the indemnity agreement provision hereinabove set forth, that the Contractor will, at all times during the term of this agreement, have and keep in force a general liability insurance policy in the amount of not less than ONE MILLION DOLLARS property damage, and ONE MILLION DOLLARS bodily injury; which policy shall name Brunswick Hills Township, the Brunswick Hills Township Trustees and Medina County Engineer as additional insureds, and provide a minimum of ten (10) days' notice to all insureds prior to cancellation.

35. Contractor has provided a Certificate of Insurance to the Township in compliance with the above terms, and agrees it shall not be canceled or materially changed without having in effect another policy to meet the above terms of paragraph 34 and without giving prior notice thereof to the Township.

36. It is still further agreed by and between the parties that no assignment, or transfer of this contract, or any part thereof, or any monies due, or to become due hereunder, shall be made by the Contractor without the written consent of the Township, but except as aforsaid, this contract shall be binding upon and shall inure to the benefit of the successors and assigns of the parties.

37. If a certified check, cashier's check or letter of credit was utilized in bidding, upon execution of this contract and execution of a performance bond in the sum of one hundred percent (100%) of the bid, said certified check, cashier's check or letter of credit shall be refunded.

38. The parties agree that the provisions of this contract are governed by the laws of the State of Ohio and that in any instance of conflict between the language of this contract and the language of the Ohio Revised Code, that said sections and chapters of the Ohio Revised Code shall prevail.

39. The parties still further agree that the following documents attached hereto shall be incorporated herein, and made a part of this contact as if fully rewritten:

Notice of Bid

Instructions to Bidders

Supplemental Specifications for County Spec. 402 and ODOT Item 422 Single Chip and Seal with Stipulated Traffic Control

Engineer's Estimate

Form of Bid Guarantee/Performance Bond

Statement of Bidder Resources and Experience

Non-Collusion Affidavit

Contractor's Indemnification Clause

Prevailing Wage Rate Schedules

Certificate of Liability Insurance

Personal Property Tax Verification Affidavit

Contractor's Bid Form

State of Ohio, Equal Opportunity Division, Certificate of Compliance

In addition, any changes therefrom shall be in an addendum, in writing, signed by the parties setting forth specifically the sum to be paid as a result of such change order.

IN WITNESS WHEREOF, the parties have caused this Agreement to be executed in triplicate

this 11 day of June, 2019.

Dated:

BOARD OF TOWNSHIP TRUSTEES
BRUNSWICK HILLS TOWNSHIP, OHIO

Michael Esber

Christina Kusnerak

John Witthuhn

CONTRACTOR:

COMPANY:
Melway Paving Company, Inc.

Signed by:

Printed name: Steve Schlabach

Title: President

Dated:

May 22, 2019

Approved as to form and legality:
S. FORREST THOMPSON
MEDINA COUNTY PROSECUTOR

Brian Richter
Assistant County Prosecutor 6/29/19

BOND ACCEPTANCE

The attached bond and power of attorney of Westfield Insurance Co. as surety is hereby accepted as being good and sufficient this 11 day of June, 2019.

BOARD OF TRUSTEES
BRUNSWICK HILLS TOWNSHIP, OHIO

Michael Esber

Christina Kusnerak

John Witthuhn

CERTIFICATE OF FISCAL OFFICER

I HEREBY CERTIFY that the money required to meet the foregoing contract, agreement or obligation has been lawfully appropriated, or authorized, or directed for such purpose, and is in the Township Treasury or in the process of collection, to the credit of 2031 Fund, free from any outstanding obligation.

Katherine Esber, Township Fiscal Officer
Brunswick Hills Township Board of Trustees

Dated at Brunswick, Ohio, June 11, 2019.

CERTIFICATE OF PROSECUTING ATTORNEY

I hereby approve to form the foregoing contract and bond.

S. Forrest Thompson
Medina County Prosecutor
By: 4/29/19
Brian Richter
Assistant County Prosecutor

Brunswick Hills Township
1918 Pearl Road
Brunswick, Ohio 44212

June 20, 2019

City of Brunswick
4095 Center Road
Brunswick, Ohio 44212

Attn: Paul E. Barnett
RE: Asphalt Resurfacing of Laurel Road and South Carpenter Road

Dear Mr. Barnett;

We are happy to work with the City to provide both your citizens and our citizens a smooth and safe driving surface through this resurfacing project. As provided to you earlier are the completed bid and completed agreement with Melway Paving Company, low bidder, for the resurfacing of the above captioned roadways. The City passed resolution 102-18 committing to cooperate on this project. We are in agreement with your request to split the costs for this work per the front property footage percentages as follows:

South Carpenter Road from Laurel to Sleepy Hollow: 24.1% City and 75.9% Township
Laurel Road from South Carpenter to West 130th Street: 62.9% City and 37.1% Township

We will be providing construction inspection for the project at our cost. Our intent is to provide final quantities at the end of construction showing the total cost to the contractor for each roadway separately along with the percentage of City share. We are requesting that the City share of the payment be made directly to Melway Paving.

Thank you for your consideration. We look forward to partnering with you now and in the future.

Sincerely,

Paul Magovac
Service Department Foreman
Brunswick Hills

2019 BRUNSWICK HILLS TOWNSHIP ROAD BID
FOR
COUNTY SPEC. 402 INTERMEDIATE ASPHALT COURSE &
ODOT ITEM 422 SINGLE CHIP & SEAL
WITH STIPULATED TRAFFIC CONTROL

In
Brunswick Hills Township
Medina County, Ohio

by the

Brunswick Hills Township Board of Trustees

Submitting Company: Melway Paving Co., Inc.

Signed: _____

Company Title: Steve Schlabach
President

Address: 7571 State Route 83

Holmesville OH 44633

Telephone: (330) 279-9000

Fax: (330) 279-9002

E-mail: estimating@melwaypaving.com

Board of Brunswick Hills Township Trustees:

Michael Esber
Christina Kusnerak
John Witthuhn

NOTICE OF BID

Bids are requested for County Spec. 402 Intermediate Asphalt Course & ODOT Item 422 Single Chip & Seal with stipulated Traffic Control on 1.41 mile of roads in Brunswick Hills Township, Medina County, Ohio.

Bid forms and specifications can be obtained daily by calling the Brunswick Hills Administration Building at 330-220-8182 between the hours of 8:00 a.m. and 3:00 p.m., Monday through Friday at a cost of $10.00. Electronic copies of the bid documents can be obtained free of charge from the Medina County Engineer web page at www.highwayengineer.co.medina.oh.us .

All bids will be accepted no later than March 21, 2019 at 1:30 P.M. at the Office of the Medina County Engineer, 791 West Smith Road, Medina, Ohio 44256 at which time all properly-filed bids will be publicly opened and read aloud.

All bids must be filed on forms provided by the Township and submitted in a sealed envelope clearly marked "2019 Brunswick Hills Township Road Bid" prior to the time and date set forth above.

The Engineer's Estimate is **$ 231,794.69**. All resurfacing shall be completed by September 13th, 2019.

Each bidder shall be required to file a bid guaranty with the bid in the form of either: (1) a Bid/Performance Bond in the amount of one-hundred percent (100%) of the amount bid; or (2) a Certified Check, Cashier's Check or Letter of Credit shall equal to 10% of the amount bid, conditioned that the bidder shall, if his bid is accepted, execute a contract in conformity with the bid, plans, details, specifications and bills of material. A Letter of Credit shall be revocable only at the option of the Township.

Additional documents that must be submitted with the bid are specified in the "Instruction to Bidders" portion of the bid documents.

All contractors and subcontractors involved with the project will, to the extent practicable, use Ohio products, materials, services, and labor in the implementation of their project. Additionally, contract compliance with the Equal Opportunity requirements of Ohio Administrative Code Chapter 123, the Governor's Executive Order of 1972, and the Governor's Executive Order 84-9 shall be required.

Bidders must comply with Prevailing Wage Rates on public improvements in Medina County, Ohio as determined by the Ohio Department of Commerce, Division of Labor and Worker Safety.

The bid will be awarded to the lowest and best bidder.

NOTICE OF BID (CONT'D.)

The Brunswick Hills Township Trustees reserve the right to reject any and all bids.

Brunswick Hills Township Board of Trustees

Michael Esber
Christina Kusnerak
John Witthuhn

Medina County Gazette

March 1st, 2019

INSTRUCTIONS TO BIDDERS

2019 BRUNSWICK HILLS TOWNSHIP ROAD BID
FOR
COUNTY SPEC. 402 INTERMEDIATE ASPHALT COURSE &
ODOT ITEM 422 SINGLE CHIP & SEAL
WITH STIPULATED TRAFFIC CONTROL

SECTION I.

Bid Proposals shall be addressed to the Board of Brunswick Hills Township Trustees.

Bids shall be enclosed in a sealed envelope marked **"2019 BRUNSWICK HILLS TOWNSHIP ROAD BID"** and shall bear the name of the bidder. All bids will be opened at the time and place stated in the "Notice of Bid."

No Bidder may withdraw his bid for a period of sixty (60) days after the date of bid opening, except as provided in Section 9.31 or Division (G) of Section 153.54 of the Ohio Revised Code. If it is not accepted within such period, such bid may be withdrawn without prejudice.

Each Bid shall contain the documents listed below in the following order:

1. Notice of Bid
2. Instructions to Bidders
3. Bid Guarantee/Performance Bond, **(Exhibit A)**
4. Statement of Bidder Resources and Experience, **(Exhibit B)**
5. Non-Collusion Affidavit, **(Exhibit C)**
6. Personal Property Tax Verification Affidavit, **(Exhibit D)**
7. Independent Contractor Indemnification Clause, **(Exhibit E)**
8. A State of Ohio, Equal Opportunity Division, Certificate of Compliance
9. Engineer's Estimate, (Summarized)
10. Bid Statement and Summation
11. Contractor's Bid Blank(s)
12. Supplemental Specifications
13. Prevailing Wage Rate Schedule

Submitted Bids must include the following completed documents:

1. Bid Guarantee/Performance Bond, **(Exhibit A)**
2. Statement of Bidder Resources and Experience, **(Exhibit B)**
3. Non-Collusion Affidavit, **(Exhibit C)**
4. Personal Property Tax Verification Affidavit, **(Exhibit D)**
5. Independent Contractor Indemnification Clause, **(Exhibit E)**
6. A State of Ohio, Equal Opportunity Division, Certificate of Compliance
7. Bid Statement and Summation
8. Contractor's Bid Blank(s)

SECTION II.

Each bidder shall satisfy the Board of Brunswick Hills Township Trustees by reference to work which he has performed, and by the equipment he utilizes, that he is fully competent to properly execute the work required by these specifications by the stipulated completion date, **(See Exhibit B)**.

SECTION III.

Bids shall be submitted using the attached blank forms, designed for such purpose. These forms must be completed intact, without removal of any part, must recite the full name of the party making the Bid, and must be properly signed.

In each blank marked "unit price", bidders are required to provide a Bid price per referenced unit for the requested materials, labor, or equipment, or referenced combination thereof. Failure to provide a price for each unit price item, or failure to provide prices for lump sum items, will render the Bid informal, allowing its rejection at the Township's discretion.

Extended unit prices are calculated by multiplying the bidder's unit price entries times their respective approximate quantities. The resultant extended unit price figures, in addition to any lump sum prices, are added to calculate the amount of each Bid.

The sum of the extended unit prices and lump sum prices provided by each Bidder shall comprise that Bidder's Bid price for consideration of award of contract. If an error is made in the extension of the unit prices, or in the addition of the unit and lump sum prices, the accurate extended unit prices and total shall govern.

Quantities provided by the Bid Documents are estimates only. The Township reserves the right to eliminate, increase, or decrease the actual quantity of any unit price item, or to non-perform any lump sum item. Sections 104.01D and 104.01E of the CMS will be excluded from use in this project.

SECTION IV.

Bidders must carefully examine the Bid Documents and perform a reasonable site investigation before submitting a Bid. Submission of a Bid is an affirmative statement that the Bidder has investigated the Project site and is satisfied as to the character, quality, quantities, and conditions to be encountered in performing the Work. A reasonable site investigation includes investigating the Project site and all other locations related to the performance of the Work.

SECTION V.

Each Bid shall be accompanied by a bid guarantee, in the form of a Bid/Performance Bond, a Certified Check, a Cashier's Check, or a Letter of Credit, in conformity with the requirements of Sections 153.54 and 153.571 (B) of the Ohio Revised Code. If A Bid/Performance Bond (Exhibit A) is used, the Bond shall be in the full amount of the bid

and signed by a Surety company authorized to do business in the State of Ohio, and accompanied by the Surety's sufficient power of attorney affirming said signature. If a Certified Check, Cashier's Check, or Letter of Credit is used, the instrument shall be drawn on a solvent bank in an amount not less than ten percent (10%) of the Bid. A letter of credit shall be revocable only at the option of the Township. The bid guarantee shall be given as security that, if the Bid is accepted, the Bidder will enter into a contract in conformity with the Bid, plans, details, specifications and bills of material.

All bid guarantees shall be made payable to the order of the **BRUNSWICK HILLS TOWNSHIP BOARD OF TRUSTEES, MEDINA COUNTY, OHIO.** Should a bid be rejected, the bid guarantee submitted in the form of a Certified Check, Cashier's Check, or Letter of Credit will be returned immediately upon the awarding of the contract, or decision to reject all bids. If a ten percent (10%) bid guarantee is used, the successful bidder will be required to submit a one-hundred percent (100%) performance bond as set forth in Exhibit A within ten (10) days of written notice of acceptance of his bid.

If for any reason, other than as authorized by Section 9.31 of the Ohio Revised Code or Division (G) of Section 153.54, the bidder to whom the contract shall have been awarded shall refuse or neglect within ten (10) days after due notice that the contract has been awarded to them to execute the same and furnish security in the amount required, the bidder, or its surety, shall be liable to the Township for the difference between the previously accepted bid, and that of the next lowest bidder, or a penal sum not to exceed ten percent (10%) of the grand total bid, whichever is less. If the Township rebids the project, a sum not to exceed ten percent (10%) of the grand total bid, or the costs in connection with the resubmission of, printing new contract documents, required advertising and printing, and mailing notices to prospective bidders, whichever is less.

Copies of the bid and bid guarantee shall be endorsed with the name of the bidder, and filed in the same envelope. Bonds or letters of credit must also be endorsed by the surety or sureties. Names of endorsers shall also be typed immediately below the signatures.

SECTION VI.

The Contractor shall guarantee all materials and work performed for a period of two (2) years from the date of completion. The Contractor warrants and guarantees for a period of two years from the date of completion of the project that all items performed are free from defects due to faulty materials or workmanship and the Contractor shall promptly make such corrections as may be necessary by reason of such defects including the repairs of any damage to other parts of the project resulting from such defects. The County will give notice of observed defects with reasonable promptness. In the event that the Contractor should fail to make such repairs, adjustments, or other work that may be necessary by such defects, the County may do so and charge the Contractor the costs thereby incurred. The Maintenance Bond shall remain in full force and effect through the guarantee period. Said Bond shall be supplied at completion of the project and after passage of the final inspection for a two (2) year period in the amount of ten percent (10%) of the construction cost, specifying the **Board of Brunswick Hills Township Trustees** and the **Board of Medina County**

Commissioners as the protected parties.

SECTION VII.

Securities Approval:

The Board of Brunswick Hills Township Trustees shall determine the sufficiency of all securities. All bonds filed pursuant to this bid offer shall be issued by a surety company authorized to conduct business in this state as surety, approved by the Board of Brunswick Hills Township Trustees.

SECTION VIII.

Minimum Wages:

Wages to be paid to all labor employees on this contract shall be in accordance with the Ohio Department of Commerce, Division of Labor and Worker Safety. Bidders are cautioned to assure the completeness of said wage schedules, and to notify the Township prior to the bid date of any omitted schedules.

The Contractor agrees to provide the Township with full and complete documentation of payment of prevailing wages to all employees of the Contractor and of its subcontractors governed by Prevailing Wage law.

The Contractor further agrees to stay informed of applicable prevailing wage rates and to immediately inform all its subcontractors and the Township of such changes. The Contractor agrees to defend and indemnify the Township, its elected officials, agents and employees, against all claims, actions, demands, judgments, settlements, damages, liabilities, losses, and costs of any kind, including, but not limited to, reasonable fees of attorneys and experts, arising from or related to the Contractor's failure to inform its subcontractors of changes in prevailing wage rates.

SECTION IX.

Other Costs and Requirements:

Bids must include all costs of furnishing labor, materials, equipment, supervision, coordination, and all other things necessary for the full and complete performance of the project and all costs of fulfilling the requirements of laws, rules, and regulations pertaining thereto. The following is a partial list of ancillary contract costs and requirements. Said list is provided for the convenience of Bidders, to assist in their inclusion of all components of costs and fulfillment of all requirements, though this list does not recite all such costs and requirements.

1. Bids must include the cost of all required bonds.

2. Bids must include the cost to procure all permits and licenses, to pay all charges, fees and taxes, and to provide all notices necessary and incidental to the due and lawful prosecution of the Work.

3. Bids must include the cost of insurance coverage of the type and at least in the amounts set forth in the specifications and bid provisions.

4. Brunswick Hills Township is exempt from all sales, excise, and transportation taxes, with the exception of State of Ohio motor fuel tax. Bid prices shall exclude all such taxes.

SECTION X.

Liability:

The Contractor shall comply with all provisions of the laws and rules of the Ohio Bureau of Workers' Compensation covering all operations under the Contract whether performed by the Contractor or its subcontractor. Contractor will agree to provide workers' compensation coverage on all employees utilized under this Agreement, as required by Ohio law, or to see that such coverage is provided by any subcontractor utilized. Contractor further will agree to hold the Township harmless and indemnify and defend the Township's trustees, officers, employees, and agents against any claim for damages raised against them as a result of Contractor's failure to provide or assure such coverage.

The Contractor shall provide general liability insurance while work is in progress and during the time the contract is in effect. The amount of coverage shall be a Minimum of **ONE MILLION DOLLARS** ($1,000,000) **property damage** and **ONE MILLION DOLLARS** ($1,000,000) **bodily injury**.

The Contractor shall provide comprehensive automobile liability insurance for all owned, non-owned, and hired vehicles. The amount of coverage for each occurrence shall be a Minimum of **ONE MILLION DOLLARS** ($1,000,000) **property damage** and **ONE MILLION DOLLARS** ($1,000,000) **bodily injury**.

A Certificate of Liability Insurance must be submitted to the Brunswick Hills Township Trustees and made an attachment to the successful bid prior to the execution of the contract agreement. Said Certificate of Liability Insurance shall name **Brunswick Hills Township**, the **Brunswick Hills Township Trustees**, and **The Medina County Engineer** as additional insureds.

The Contractor shall be liable for all amounts including that in excess of the insurance, if any, and the Contractor shall agree, in writing, to hold the Township harmless from all claims of damages resulting from the work undertaken.

Should Contractor's policy of liability insurance be canceled or subject to reduction of coverage, Contractor will immediately notify the Township of such cancellation or reduction and shall use its best efforts to obtain the level of coverage required by this Contract. The inability of Contractor to obtain such replacement coverage may warrant the immediate suspension of this contract, at the sole discretion of the Township.

SECTION XI.

Personal Property Taxes:

Brunswick Hills Township, prior to entering into a formal contract with the successful bidder will receive from the contractor, a signed affidavit stating their personal property tax liability to Medina County. This form shall be included in this package, **(Exhibit D)** .

SECTION XII.

Factors for Acceptance or Rejection of Bids:

1. Pursuant to Ohio Revised Code 5575.01 and 5575.02, a contract shall be awarded to the lowest and best Bid.

2. Any Bid which is incomplete, conditional, obscure, or which contains additions not called for or irregularities of any kind, may be rejected.

3. The Township reserves the right to reject any and all Bids, and also the right to waive any informality in the Bid. The Township has the right to postpone the decision to award a contract for up to forty-five (45) days.

4. No contract shall be awarded to any person, firm, or corporation that is in arrears or is in default to the Township upon any debt or contract, or that is in default as surety or otherwise upon any obligation to the Township, or that has an unresolved finding of recovery with the State Auditor, or has been debarred by the Township or Medina County from consideration for contract awards.

SECTION XIII.

Precautions:

All Bidders should take the following precautions in preparing his bid:

1. Sign and fill out each proposal completely. Only bid documents filled out with permanent marking instruments (i.e., pen or typewriter) will be considered in awarding of the contract. Bid documents totals and signatures completed with pencil will not be read or accepted.

2. Make sure the bid guarantee is properly executed and signed.

3. Where a guaranteed bond is utilized, make sure it is properly executed and signed by both the surety and the bidder, with the names of the parties signing typed immediately below their signatures; affix any corporate seal.

4. Make sure that the agent of the surety bonding company can furnish on demand.
   a. credentials showing his power of attorney.
   b. certificate showing the legal right of the company to conduct business in the State of Ohio.

SECTION XIV.

Interpretations of Bidding Documents:

Bidders shall promptly notify the County Engineer through Dan Becker, Project Engineer, (330) 723-9655, of any ambiguity, inconsistency or error which he may discover upon examination of the bidding documents. Bidders requiring clarification or interpretation of the bidding documents shall make a written request to the Township, prior to the date of bid opening.

Any written interpretation, correction or change of the bidding documents will be made by addendum. Interpretations, corrections or changes of the bidding document made in any other manner will not be binding, and the bidders shall not rely upon such interpretations, corrections and changes.

SECTION XV.

Payment:

The successful contractor will bill Brunswick Hills Township for the items (or proposals) included in this bid.

Retainage requirements as detailed in the contract shall be followed in order to process invoices.

Invoices shall itemize actual quantities of materials used (by proposal) in the same form as the Contractor's Bid Blank.

Completed invoices will be addressed to the Brunswick Hills Township Board of Trustees and sent directly to the Township Fiscal Officer.

Approved invoices will be forwarded to the Township Trustees for payment.

The Township will remit payment of approved invoices directly to the Contractor within 45 days of the date that the invoice is received by the Township.

INVOICE: BRUNSWICK HILLS TOWNSHIP BOARD OF TRUSTEES

MAIL COMPLETED INVOICES AND CORRELATED DOCUMENTATION, I.E. TICKETS, AFFIDAVITS, PAYROLL RECORDS, ETC. TO:

Katherine Esber, Brunswick Hills Township Fiscal Officer
1918 Pearl Rd.
Brunswick Hills, Ohio 44212

Keith Faber
Ohio Auditor

Certified Search for Unresolved Findings for Recovery

OHIO AUDITOR OF STATE
KEITH FABER

Office of Auditor of State
88 East Broad Street
Post Office Box 1140
Columbus, OH 43216-1140

(614) 466-4514
(800) 282-0370

Auditor of State - Unresolved Findings for Recovery Certified Search

I have searched The Auditor of State's unresolved findings for recovery database using the following criteria:

Contractor's Information:

Name: **Schlabach, Steve**
Organization: **Melway Paving Company Inc.**
Date: **3/27/2019 3:27:22 PM**

This search produced the following list of **61** possible matches:

Name/Organization	Address
Bocook, Steve	
Connell, Steve	8851 Cedar Hills Road
Crockett, Steve	3280 Morse Rd., Suite 214
Ellison, Steven	1832 Wynnwood Lane
Freeman, Steven	213 W Como Ave
Johnson, Steven	1110 East Main Street, Apartment 611
Johnson, Steven	4027 Shaker Road
Rogers, Steven	159 Virginia Avenue
Setzer, Steve	13 Honeysuckle Lane
Steed, Steve	1825 Connecticut Avenue SE
Bischof, Ronald	3227 Rustic Valley Drive
Donald, Sterling K	6303 Meyers Dr
Fischbach, Justin G.	26986 Glenside Lane
Haddix, Stella	
Harmony Community School,	
Harmony Community School, c/o Buckeye Community Hope Foundation,	3021 East Dubl Granville Road
Harmony Community School, c/o Buckeye Community Hope Foundation,	3021 East Dublin Granville Rd.
Harmony Community School, c/o Buckeye Community Hope Foundation,	3021 East Dublin Granville Road
Harmony Community School, c/o Buckeye Community Hope Foundation,	3021 East Dublin-Granville Rd.
Harmony Community School, c/o Buckeye Community Hope Foundation,	3021 East Dublin Granville Rd
Harte Crossroads High School,	350 Columbus City Center Drive
Harte Crossroads Public Schools	350 Columbus City Center Drive
Institute of Charter School Management and Resources,	368 South Patterson Boulevard
Jones, Stephanie	96 Bilvead Road

Name/Organization	Address
Jones, Stephen Todd	16605-J Redcliff Drive
Travelers Casualty and Surety Company of America	304 N. 2nd Street
Liberty Local School District,	4115 Shady Road
Millard, Stephanie	2120 Kemper Lane, Apartment 1
Ohio Farmer's Insurance Company	2120 Kemper Lane Apartment 1
Ohio Farmers Insurance Company	2120 Kemper Lane, Apt. 1
Ohio Farmers Insurance Company	2120 Kemper Lane Apt. 1
Ohio Farmers Insurance Company	2120 Kemper Lane, Apartment 1
Ohio Farmers Insurance Company	2120 Kemper Lane, Apt. 1
Ohio Farmers Insurance Company (Westfield Group)	2120 Kemper Lane, Apartment 1
Phipps, Stephanie	3572 B Big Run Road
Rauschenbach, Timothy	315 Hopewell Drive
Rhea Academy Community School,	
Rheinfrank, Stephanie	345 Delaware Dr
Venice Group, Inc.	1565 Integrity Drive E.
Schaeffer, Herman	
Schaeffer, Joyce	
Schaffter, David	417 Main Street
Schaffter, David	908 Hidden Valley Drive
Travelers Casualty and Surety Company of America	41200 Ravens Edge Way
Schmidt, Creston	1278 Vicki
Schneider, David	20088 Center Ridge Road
The Hanover Insurance Group, Inc	20088 Center Ridge Road
The Hanover Insurance Group, Inc.	20088 Center Ridge Road
Scholarts Preparatory and Career Center for Children,	PO Box 360895
Schweikert, Mark	109 Conreh Drive
Sites, Stephen	204 Lane Street
Sites, Stephen	3702 Christopher Pl
Sites, Stephen	3702 Christopher Place
Sites, Stephen	845 Marion Pike
Harris Computer ACE Charter School Services	845 Marion Pike
Hartford Fire Insurance Company,	845 Marion Pike
Starks, Jr., Chester	11470 Euclid Ave. #170
Starks, Jr., Chester	11470 Euclid Avenue #170
The Harte School,	350 Columbus City Center Drive
The International Preparatory School	1301 East 9th Street, Suite 1900
Theodore Roosevelt Public Community School,	c/o Richland Academy 75 North Walnut Street

The above list represents possible matches for the search criteria you entered. Please note that pursuant to ORC 9.24, only the person (which includes an organization) actually named in the finding for recovery is prohibited from being awarded a contract.

If the person you are searching for appears on this list, it means that the person has one or more findings for recovery and is prohibited from being awarded a contract described in ORC 9.24, unless one of the exceptions in that section apply.

If the person you are searching for does not appear on this list, an initialed copy of this page can serve as documentation of your compliance with ORC 9.24(E).

Please note that pursuant to ORC 9.24, it is the responsibility of the public office to verify that a person to whom it plans to award a contract does not appear in the Auditor of State's database. The Auditor of State's office is not responsible for inaccurate search results caused by user error or other circumstances beyond the Auditor of State's control.

Keith Faber
Ohio Auditor

Certified Search for Unresolved Findings for Recovery

OHIO AUDITOR OF STATE
KEITH FABER

Office of Auditor of State
88 East Broad Street
Post Office Box 1140
Columbus, OH 43216-1140

(614) 466-4514
(800) 282-0370

Auditor of State - Unresolved Findings for Recovery Certified Search

I have searched The Auditor of State's unresolved findings for recovery database using the following criteria:

Contractor's Information:

Name: **Schlabach, Steve**
Organization:
Date: **3/27/2019 3:27:45 PM**

This search produced the following list of **61** possible matches:

Name/Organization	Address
Bocook, Steve	
Connell, Steve	8851 Cedar Hills Road
Crockett, Steve	3280 Morse Rd., Suite 214
Ellison, Steven	1832 Wynnwood Lane
Freeman, Steven	213 W Como Ave
Johnson, Steven	1110 East Main Street, Apartment 611
Johnson, Steven	4027 Shaker Road
Rogers, Steven	159 Virginia Avenue
Setzer, Steve	13 Honeysuckle Lane
Steed, Steve	1825 Connecticut Avenue SE
Bischof, Ronald	3227 Rustic Valley Drive
Donald, Sterling K	6303 Meyers Dr.
Fischbach, Justin G.	26986 Glenside Lane
Haddix, Stella	
Harmony Community School,	
Harmony Community School, c/o Buckeye Community Hope Foundation,	3021 East Dublin Granville Road
Harmony Community School, c/o Buckeye Community Hope Foundation,	3021 East Dublin Granville Rd.
Harmony Community School, c/o Buckeye Community Hope Foundation,	3021 East Dublin Granville Road
Harmony Community School, c/o Buckeye Community Hope Foundation,	3021 East Dublin-Granville Rd.
Harmony Community School, c/o Buckeye Community Hope Foundation,	3021 East Dublin Granville Rd.
Harte Crossroads High School,	350 Columbus City Center Drive
Harte Crossroads Public Schools,	350 Columbus City Center Drive
Institute of Charter School Management and Resources,	368 South Patterson Boulevard
Jones, Stephanie	95 B Mead Road

Name/Organization	Address
Jones, Stephen Todd	16605-J Redcliff Drive
Travelers Casualty and Surety Company of America	304 N. 2nd Street
Liberty Local School District,	4115 Shady Road
Millard, Stephanie	2120 Kemper Lane, Apartment 1
Ohio Farmer's Insurance Company	2120 Kemper Lane Apartment 1
Ohio Farmers Insurance Company	2120 Kemper Lane, Apt. 1
Ohio Farmers Insurance Company	2120 Kemper Lane Apt. 1
Ohio Farmers Insurance Company	2120 Kemper Lane, Apartment 1
Ohio Farmers Insurance Company	2120 Kemper Lane, Apt. 1
Ohio Farmers Insurance Company (Westfield Group)	2120 Kemper Lane, Apartment 1
Phipps, Stephanie	3572 B Big Run Road
Rauschenbach, Timothy	315 Hopewell Drive
Rhea Academy Community School,	
Rheinfrank, Stephanie	345 Delaware Dr
Venice Group, Inc.	1565 Integrity Drive E.
Schaeffer, Herman	
Schaeffer, Joyce	
Schaffter, David	417 Main Street
Schaffter, David	908 Hidden Valley Drive
Travelers Casualty and Surety Company of America	41200 Ravens Edge Way
Schmidt, Creston	1278 Vicki
Schneider, David	20088 Center Ridge Road
The Hanover Insurance Group, Inc	20088 Center Ridge Road
The Hanover Insurance Group, Inc	20088 Center Ridge Road
Scholarts Preparatory and Career Center for Children,	PO Box 360895
Schweikert, Mark	109 Conren Drive
Sites, Stephen	204 Lane Street
Sites, Stephen	3702 Christopher Pl
Sites, Stephen	3702 Christopher Place
Sites, Stephen	845 Marion Pike
Harris Computer ACE Charter School Services	845 Marion Pike
Hartford Fire Insurance Company	845 Marion Pike
Starks, Jr., Chester	11470 Euclid Ave. #170
Starks, Jr., Chester	11470 Euclid Avenue #170
The Harte School,	350 Columbus City Center Drive
The International Preparatory School	1301 East 9th Street, Suite 1900
Theodore Roosevelt Public Community School,	c/o Richland Academy 75 North Walnut Street

The above list represents possible matches for the search criteria you entered. Please note that pursuant to ORC 9.24, only the person (which includes an organization) actually named in the finding for recovery is prohibited from being awarded a contract.

If the person you are searching for appears on this list, it means that the person has one or more findings for recovery and is prohibited from being awarded a contract described in ORC 9.24, unless one of the exceptions in that section apply.

If the person you are searching for does not appear on this list, an initialed copy of this page can serve as documentation of your compliance with ORC 9.24(E).

Please note that pursuant to ORC 9.24, it is the responsibility of the public office to verify that a person to whom it plans to award a contract does not appear in the Auditor of State's database. The Auditor of State's office is not responsible for inaccurate search results caused by user error or other circumstances beyond the Auditor of State's control.

[EXHIBIT A]

2019 BRUNSWICK HILLS TOWNSHIP ROAD BID

MEDINA COUNTY, OHIO

FORM OF BID GUARANTEE / PERFORMANCE BOND

"KNOW ALL MEN BY THESE PRESENTS, that we, the undersigned

Melway Paving Company, Inc. as principal

and Ohio Farmers Insurance Company as sureties,

are hereby held and bound unto **Brunswick Hills Township Trustees** as obligee in the penal sum of the Dollar Amount of the bid submitted by the principal to the obligee on

March 21, 2019 to undertake the project known as **The 2019 Brunswick Hills Township Road Bid**. The penal sum referred to herein shall be the Dollar Amount of the principal's bid to the obligee, incorporating any additive or deductive alternate proposals made by the obligee. In no case shall the penal sum exceed the amount of _____ DOLLARS. (If the foregoing blank is not filled in, the penal sum will be the full amount of the principal's bid, including alternates. Alternatively, if the blank is filled in, the amount stated must not be less than the full amount of the bid including alternates, in dollars and cents. A percentage is not acceptable.) For the payment of the penal sum well and truly to be made, we hereby jointly and severally bind ourselves, our heirs, executors, administrators, successors, and assigns.

Signed this 12th day of March, 20 19.

THE CONDITION OF THE ABOVE OBLIGATION IS SUCH, that whereas the above-named principal has submitted a bid for The 2019 Brunswick Hills Township Road Bid.

NOW, THEREFORE, if the obligee accepts the bid of the principal and the principal fails to enter into a proper contract in accordance with the bid, plans, details, specifications, and bills of material; and in the event the principal pays to the obligee the difference not to exceed ten percent (10%) of the penalty hereof between the amount specified in the bid and such larger amount for which the obligee may in good faith contract with the next lowest bidder to perform the work covered by the bid; or in the event the obligee does not award the contract to the next lowest bidder and resubmits the project for

bidding, the principal pays to the obligee the difference not to exceed ten percent (10%) of the penalty hereof between the amount specified in the bid, or the costs, in

[EXHIBIT A] – Cont'd

connection with the resubmission of, printing new contract documents, required advertising, and printing and mailing notices to prospective bidders, whichever is less, then this obligation shall be null and void, otherwise to remain in full force and effect; if the obligee accepts the bid of the principal and the principal within ten (10) days after the awarding of the contract enters into a proper contract in accordance with the bid, plans, details, specifications, and bills of material, which said contract is made a part of this bond the same as though set forth herein;

Now, also, if the said Melway Paving Company, Inc.

shall well and faithfully do and perform the things agreed by

The Brunswick Hills Township Trustees of Brunswick Hills Twp., Medina County, Ohio to

be done and performed according to terms of said contract; and shall pay all lawful claims of subcontractors, material, men, and laborers, for labor performed and materials furnished in the carrying forward, performing, or completing of said contract; we agreeing and assenting that this undertaking shall be for the benefit of any material men or laborer having a just claim, as well as for the obligee herein; then this obligation shall be void; otherwise, the same shall remain in full force and effect; it being expressly understood and agreed that the liability of the surety for any and all claims hereunder shall in no event exceed the penal sum amount of this obligation as herein stated.

The said surety hereby stipulates and agrees that no modifications, omissions, or additions, in or to the terms of the said contract or in or to the plans or specifications therefore shall in any wise affect the obligations of said surety on its bond.

Melway Paving Company, Inc.
(Contractor)

By: _____

Ohio Farmers Insurance Company
(Surety)

One Park Circle, PO Box 5001
(Address of Surety)

Westfield Center, OH 44251

By: Lillian Kauffman, Attorney-in-Fact

Attest: Lillian Kauffman

Hummel Group, Inc.
PO Box 250, Berlin, OH 44610

(Address of Agent)

THIS POWER OF ATTORNEY SUPERCEDES ANY PREVIOUS POWER BEARING THIS SAME POWER # AND ISSUED PRIOR TO 02/14/19, FOR ANY PERSON OR PERSONS NAMED BELOW.

POWER NO. **3401722 04**

General
Power
of Attorney

CERTIFIED COPY

Westfield Insurance Co.
Westfield National Insurance Co.
Ohio Farmers Insurance Co.

Westfield Center, Ohio

Know All Men by These Presents, That WESTFIELD INSURANCE COMPANY, WESTFIELD NATIONAL INSURANCE COMPANY and OHIO FARMERS INSURANCE COMPANY, corporations, hereinafter referred to individually as a "Company" and collectively as "Companies," duly organized and existing under the laws of the State of Ohio, and having its principal office in Westfield Center, Medina County, Ohio, do by these presents make, constitute and appoint
DAVID COIL, LILLIAN KAUFFMAN, THOMAS YODER, KARA D. SCHROCK, JASON LEE TROYER, JOINTLY OR SEVERALLY

of **BERLIN** and State of **OH** its true and lawful Attorney(s)-in-Fact, with full power and authority hereby conferred in its name, place and stead, to execute, acknowledge and deliver **any and all bonds, recognizances, undertakings, or other instruments or contracts of suretyship-** -.

LIMITATION: THIS POWER OF ATTORNEY CANNOT BE USED TO EXECUTE NOTE GUARANTEE, MORTGAGE DEFICIENCY, MORTGAGE GUARANTEE, OR BANK DEPOSITORY BONDS.
and to bind any of the Companies thereby as fully and to the same extent as if such bonds were signed by the President, sealed with the corporate seal of the applicable Company and duly attested by its Secretary, hereby ratifying and confirming all that the said Attorney(s)-in-Fact may do in the premises. Said appointment is made under and by authority of the following resolution adopted by the Board of Directors of each of the WESTFIELD INSURANCE COMPANY, WESTFIELD NATIONAL INSURANCE COMPANY and OHIO FARMERS INSURANCE COMPANY:

"*Be It Resolved,* that the President, any Senior Executive, any Secretary or any Fidelity & Surety Operations Executive or other Executive shall be and is hereby vested with full power and authority to appoint any one or more suitable persons as Attorney(s)-in-Fact to represent and act for and on behalf of the Company subject to the following provisions:

The Attorney-in-Fact. may be given full power and authority for and in the name of and on behalf of the Company, to execute, acknowledge and deliver, any and all bonds, recognizances, contracts, agreements of indemnity and other conditional or obligatory undertakings and any and all notices and documents canceling or terminating the Company's liability thereunder, and any such instruments so executed by any such Attorney-in-Fact shall be as binding upon the Company as if signed by the President and sealed and attested by the Corporate Secretary."

"*Be it Further Resolved,* that the signature of any such designated person and the seal of the Company heretofore or hereafter affixed to any power of attorney or any certificate relating thereto by facsimile, and any power of attorney or certificate bearing facsimile signatures or facsimile seal shall be valid and binding upon the Company with respect to any bond or undertaking to which it is attached." (Each adopted at a meeting held on February 8, 2000).

In Witness Whereof, WESTFIELD INSURANCE COMPANY, WESTFIELD NATIONAL INSURANCE COMPANY and OHIO FARMERS INSURANCE COMPANY have caused these presents to be signed by their **National Surety Leader and Senior Executive** and their corporate seals to be hereto affixed this **14th** day of **FEBRUARY** A.D., **2019** .

Corporate Seals Affixed

WESTFIELD INSURANCE COMPANY
WESTFIELD NATIONAL INSURANCE COMPANY
OHIO FARMERS INSURANCE COMPANY

By: **Dennis P. Baus**, *National Surety Leader and Senior Executive*

State of Ohio
County of Medina ss.:

On this **14th** day of **FEBRUARY** A.D., **2019** , before me personally came **Dennis P. Baus** to me known, who, being by me duly sworn, did depose and say, that he resides in **Wooster, Ohio;** that he is **National Surety Leader and Senior Executive** of WESTFIELD INSURANCE COMPANY, WESTFIELD NATIONAL INSURANCE COMPANY and OHIO FARMERS INSURANCE COMPANY, the companies described in and which executed the above instrument; that he knows the seals of said Companies; that the seals affixed to said instrument are such corporate seals; that they were so affixed by order of the Boards of Directors of said Companies; and that he signed his name thereto by like order.

Notarial Seal Affixed

David A. Kotnik, Attorney at Law, *Notary Public*
My Commission Does Not Expire (Sec. 147.03 Ohio Revised Code)

State of Ohio
County of Medina ss.:

I, **Frank A. Carrino,** Secretary of WESTFIELD INSURANCE COMPANY, WESTFIELD NATIONAL INSURANCE COMPANY and OHIO FARMERS INSURANCE COMPANY, do hereby certify that the above and foregoing is a true and correct copy of a Power of Attorney, executed by said Companies, which is still in full force and effect; and furthermore, the resolutions of the Boards of Directors, set out in the Power of Attorney are in full force and effect.

In Witness Whereof, I have hereunto set my hand and affixed the seals of said Companies at Westfield Center, Ohio, this 12th day of March A.D., 2019

Secretary
Frank A. Carrino, *Secretary*

BPOAC2 (combined) (06-02)

Financial Statement

December 31, 2018

Ohio Farmers Insurance Co.
Westfield Center, Ohio 44251-5001

OHIO FARMERS INSURANCE COMPANY
BALANCE SHEET

12/31/18
(in thousands)

Assets	
Cash, cash equivalents, and short term investments	57,706
Bonds	456,847
Stocks	137,628
Subsidiaries	1,977,203
Real estate	130,031
Premiums receivable	117,431
Other assets	142,647
Total assets	3,019,493
Liabilities	
Reserve for unearned premiums	171,785
Reserve for unpaid losses and loss expenses	335,594
Reserve for taxes and other liabilities	234,715
Total liabilities	742,094
Surplus	
Surplus to policyholders	2,277,399
Total surplus	2,277,399
Total liabilities and surplus	3,019,493

State of Ohio
ss:
County of Medina

The undersigned, being duly sworn, says: That he is National Surety Leader - Surety Operations of Ohio Farmers Insurance Company, Westfield Center, Ohio; that said Company is a corporation duly organized, existing and engaged in business as a Surety Company by virtue of the Laws of the State of Ohio and authorized to do business in the State of .....Ohio..... and has duly complied with all the requirements of the laws of said State applicable to said Company and is duly qualified to act as Surety under such laws; that said Company has also complied with and is duly qualified to act as Surety under the Act of Congress approved July 1947, 6 U.S.C. sec. 6-13; and that to the best of his knowledge and belief the above statement is a full, true, and correct statement of the financial condition of the said Company on the 31st day of December, 2018.

Attest:

Frank Carrino
.....
Frank A. Carrino
Group Legal Leader, Secretary

Dennis P. Baus
.....
Dennis P. Baus
National Surety Leader
Senior Executive

Sworn to before me this 13th day of February A.D. 2019.

David A. Kotnik
.....
David A. Kotnik
Attorney at Law
Notary Public – State of Ohio

My Commission Does Not Expire
Sec. 147.03 Ohio Revised Code

BD5402 B

Office of Risk Assessment
50 West Town Street
Third Floor - Suite 300
Columbus,Ohio 43215
(614)644-2658
Fax(614)644-3256
www.insurance.ohio.gov

Ohio Department of Insurance

John R. Kasich - Governor

Jillian Froment - Director

Certificate of Compliance

Issued 06/28/2018
Effective 07/01/2018
Expires 06/30/2019

I, Jillian Froment, hereby certify that I am the Director of Insurance in the State of Ohio and have supervision of insurance business in said State and as such I hereby certify that

OHIO FARMERS INSURANCE COMPANY

of Ohio is duly organized under the laws of this State and is authorized to transact the business of insurance under the following section(s) of the Ohio Revised Code:

Section 3929.01 (A)

Accident & Health
Aircraft
Allied Lines
Boiler & Machinery
Burglary & Theft
Collectively Renewable A & H
Commercial Auto - Liability
Commercial Auto - No Fault
Commercial Auto - Physical Damage
Credit Accident & Health
Earthquake
Fidelity
Financial Guaranty
Fire
Glass
Group Accident & Health
Guaranteed Renewable A & H
Inland Marine
Medical Malpractice
Multiple Peril - Commercial
Multiple Peril - Farmowners
Multiple Peril - Homeowners
Noncancellable A & H
Nonrenew-Stated Reasons (A&H)
Ocean Marine
Other Accident only
Other Liability
Private Passenger Auto - Liability
Private Passenger Auto - No Fault
Private Passenger Auto - Physical Damage
Surety
Workers Compensation

OHIO FARMERS INSURANCE COMPANY certified in its annual statement to this Department as of December 31,2017 that it has admitted assets in the amount of $3,107,895,303, liabilities in the amount of $773,381,320, and surplus of at least $2,334,513,983.

IN WITNESS WHEREOF, I have hereunto subscribed my name and caused my seal to be affixed at Columbus, Ohio, this day and date.

Jillian Froment, Director

ACORD®

CERTIFICATE OF LIABILITY INSURANCE

DATE (MM/DD/YYYY): 4/1/2019

THIS CERTIFICATE IS ISSUED AS A MATTER OF INFORMATION ONLY AND CONFERS NO RIGHTS UPON THE CERTIFICATE HOLDER. THIS CERTIFICATE DOES NOT AFFIRMATIVELY OR NEGATIVELY AMEND, EXTEND OR ALTER THE COVERAGE AFFORDED BY THE POLICIES BELOW. THIS CERTIFICATE OF INSURANCE DOES NOT CONSTITUTE A CONTRACT BETWEEN THE ISSUING INSURER(S), AUTHORIZED REPRESENTATIVE OR PRODUCER, AND THE CERTIFICATE HOLDER.

IMPORTANT: If the certificate holder is an ADDITIONAL INSURED, the policy(ies) must be endorsed. If SUBROGATION IS WAIVED, subject to the terms and conditions of the policy, certain policies may require an endorsement. A statement on this certificate does not confer rights to the certificate holder in lieu of such endorsement(s).

PRODUCER
Hummel Group, Inc.
4585 State Route 39
PO Box 250
Berlin OH 44610

CONTACT NAME: Kara Schrock
PHONE (A/C, No, Ext): (330)893-2600 FAX (A/C, No): (330)893-3339
E-MAIL ADDRESS: kschrock@hummelgrp.com

INSURER(S) AFFORDING COVERAGE	NAIC #
INSURER A: Westfield Insurance Company	24112
INSURER B:	
INSURER C:	
INSURER D:	
INSURER E:	
INSURER F:	

INSURED Melway Paving Co., Inc.
Holmes Supply Corporation
S & S Transport, Inc. dba Melway Service Corp.
7571 State Route 83
Holmesville OH 44633

COVERAGES CERTIFICATE NUMBER: 2019-2020 REVISION NUMBER:

THIS IS TO CERTIFY THAT THE POLICIES OF INSURANCE LISTED BELOW HAVE BEEN ISSUED TO THE INSURED NAMED ABOVE FOR THE POLICY PERIOD INDICATED. NOTWITHSTANDING ANY REQUIREMENT, TERM OR CONDITION OF ANY CONTRACT OR OTHER DOCUMENT WITH RESPECT TO WHICH THIS CERTIFICATE MAY BE ISSUED OR MAY PERTAIN, THE INSURANCE AFFORDED BY THE POLICIES DESCRIBED HEREIN IS SUBJECT TO ALL THE TERMS, EXCLUSIONS AND CONDITIONS OF SUCH POLICIES. LIMITS SHOWN MAY HAVE BEEN REDUCED BY PAID CLAIMS.

INSR LTR	TYPE OF INSURANCE	ADDL INSD	SUBR WVD	POLICY NUMBER	POLICY EFF (MM/DD/YYYY)	POLICY EXP (MM/DD/YYYY)	LIMITS		
A	X COMMERCIAL GENERAL LIABILITY CLAIMS-MADE X OCCUR GEN'L AGGREGATE LIMIT APPLIES PER: POLICY X PRO-JECT LOC OTHER:	X		TRA3556797	2/1/2019	2/1/2020	EACH OCCURRENCE	$	1,000,000
							DAMAGE TO RENTED PREMISES (Ea occurrence)	$	500,000
							MED EXP (Any one person)	$	10,000
							PERSONAL & ADV INJURY	$	1,000,000
							GENERAL AGGREGATE	$	2,000,000
							PRODUCTS - COMP/OP AGG	$	2,000,000
							Employee Benefits	$	1,000,000
A	AUTOMOBILE LIABILITY X ANY AUTO ALL OWNED AUTOS SCHEDULED AUTOS HIRED AUTOS NON-OWNED AUTOS			TRA3556797	2/1/2019	2/1/2020	COMBINED SINGLE LIMIT (Ea accident)	$	1,000,000
							BODILY INJURY (Per person)	$	
							BODILY INJURY (Per accident)	$	
							PROPERTY DAMAGE (Per accident)	$	
							Medical payments	$	5,000
A	X UMBRELLA LIAB X OCCUR EXCESS LIAB CLAIMS-MADE DED X RETENTION $ 0			TRA3556797	2/1/2019	2/1/2020	EACH OCCURRENCE	$	10,000,000
							AGGREGATE	$	10,000,000
								$	
A	~~WORKERS COMPENSATION~~ EMPLOYERS' LIABILITY ANY PROPRIETOR/PARTNER/EXECUTIVE OFFICER/MEMBER EXCLUDED? (Mandatory in NH) Y/N N If yes, describe under DESCRIPTION OF OPERATIONS below	N/A		TRA3556797 (Employers Liab. Only)	2/1/2019	2/1/2020	PER STATUTE X OTH-ER		
							E.L. EACH ACCIDENT	$	1,000,000
							E.L. DISEASE - EA EMPLOYEE	$	1,000,000
							E.L. DISEASE - POLICY LIMIT	$	1,000,000
A	Hired Auto Physical Damage Coverage			TRA3556797	2/1/2019	2/1/2020	Comprehensive Ded - $1,000 Collision Ded - $1,000		ACV

DESCRIPTION OF OPERATIONS / LOCATIONS / VEHICLES (ACORD 101, Additional Remarks Schedule, may be attached if more space is required)

Project: 2019 Brunswick Hills Township Road Bid.

Brunswick Hills, Brunswick Hills Board of Trustees, and the Medina County Engineers are an additional insured if required by written contract or agreement, subject to the general liability blanket additional insured endorsement included on this policy. Cancellation clause applicable is 10 day notice of cancellation.

CERTIFICATE HOLDER

Brunswick Hills Township Board of Trustee
Medina County
1918 Pearl Road
Brunswick, OH 44212

CANCELLATION

SHOULD ANY OF THE ABOVE DESCRIBED POLICIES BE CANCELLED BEFORE THE EXPIRATION DATE THEREOF, NOTICE WILL BE DELIVERED IN ACCORDANCE WITH THE POLICY PROVISIONS.

AUTHORIZED REPRESENTATIVE

D Coil CIC, FLMI/KSCH

© 1988-2014 ACORD CORPORATION. All rights reserved.

The ACORD name and logo are registered marks of ACORD

OHIO DEPARTMENT OF TRANSPORTATION

Home (/s/) Search... Login

ODOT
Pre-Qualified Contractors

Enter Contractor to search on

Melway

Toggle Work Types all

Select Work Types

- ✓ 1. Clearing and Grubbing
- ✓ 2. Building Removal
- 3. Gas, Oil, Water Well Abandonments
- ✓ 4. Roadway Excavation and Embankment Construction
- 5. Major Roadway Excavation
- ✓ 6. Incidental Grading
- ✓ 7. Soil Stabilization
- ✓ 8. Temporary Soil Erosion & Sediment Control
- ✓ 9. Aggregate Bases
- ✓ 10. Flexible Paving
- ✓ 11. Apply Bituminous Treatments
- 12. Rigid Paving
- ✓ 13. Pavement Planing, Milling, Scarification
- 14. Concrete Texturing
- ✓ 15. Sawing
- ✓ 16. Flexible Replacement
- 17. Rigid Pavement Replacement
- 18. Pavement Rubblizing, Breaking, Pulverizing
- ✓ 19. Structure Removal
- 20. Level 1 Bridge
- 21. Level 2 Bridge
- 22. Level 3 Bridge
- 23. Reinforcing Steel
- 24. Structural Steel Erection
- 25. Stud Welding
- 26. Structural Steel Painting

ACCOUNT NAME	VENDOR ID	ADDRESS	APP EXP DATE	WORK TYPES
MELWAY PAVING CO INC	111305002	7571 ST RT 83 HOLMESVILLE OH, 44633 330-279-9000	2019-08-31	1. Clearing and Grubbing 2. Building Removal 4. Roadway Excavation and Embankment Construction 6. Incidental Grading 7. Soil Stabilization 8. Temporary Soil Erosion & Sediment Control 9. Aggregate Bases 10. Flexible Paving 11. Apply Bituminous Treatments 13. Pavement Planing, Milling, Scarification 15. Sawing 16. Flexible Replacement 19. Structure Removal 35. Drainage (culvert, misc.) 38. Miscellaneous Concrete 39. Maintenance of Traffic 40. Waterproofing 46. Landscaping 47. Mowing 48. Trucking

Ohio | Bureau of Workers' Compensation

30 W. Spring St.
Columbus, OH 43215

Certificate of Ohio Workers' Compensation

This certifies that the employer listed below participates in the Ohio State Insurance Fund as required by law. Therefore, the employer is entitled to the rights and benefits of the fund for the period specified. This certificate is only valid if premiums and assessments, including installments, are paid by the applicable due date. To verify coverage, visit www.bwc.ohio.gov, or call 1-800-644-6292.

This certificate must be conspicuously posted.

Policy number and employer
00748325

MELWAY PAVING COMPANY INC
7571 STATE ROUTE 83
HOLMESVILLE, OH 44633-9633

Period Specified Below
07/01/2018 to 07/01/2019

www.bwc.ohio.gov
Issued by: BWC

Administrator/CEO

You can reproduce this certificate as needed.

Ohio Bureau of Workers' Compensation

Required Posting

Effective Oct. 13, 2004, Section 4123.54 of the Ohio Revised Code requires notice of rebuttable presumption. Rebuttable presumption means an employee may dispute or prove untrue the presumption (or belief) that alcohol or a controlled substance not prescribed by the employee's physician is the proximate cause (main reason) of the work-related injury.

The burden of proof is on the employee to prove the presence of alcohol or a controlled substance was not the proximate cause of the work-related injury. An employee who tests positive or refuses to submit to chemical testing may be disqualified for compensation and benefits under the Workers' Compensation Act.

Ohio | Bureau of Workers' Compensation

You must post this language with the Certificate of Ohio Workers' Compensation.

In Compliance

CERTIFICATION OF COMPLIANCE

Melway Paving Co., Inc.
7571 State Route 83
Holmesville,OH 44633

Effective Dates: 02/07/2019 through 08/06/2019

The Equal Opportunity Division of the Ohio Department of Administrative Services (Division) hereby issues Melway Paving Co., Inc. a Certificate of Compliance. The Certificate shall be in force for 180 days from the date of issuance.

Section 9.47 of the Revised Code requires the Division to review affirmative action programs and plans of each company desiring to participate on state-assisted construction contracts and determine whether that company has violated any affirmative action programs and goals for which that company was obligated to meet during the preceding five years. Based on the above-referenced review, the Division has found no such violation(s).

Please be advised that for Melway Paving Co., Inc. to maintain certification status, Melway Paving Co., Inc. must continue to ensure equal employment opportunities in accordance with applicable State and Federal EEO laws, rules, regulations and guidelines, and meet those contractual obligations for which Melway Paving Co., Inc. has agreed.

Todd McGonigle
Acting Deputy Director
State EEO Coordinator

[EXHIBIT B]

THE 2019 BRUNSWICK HILLS TOWNSHIP ROAD BID

MEDINA COUNTY, OHIO

STATEMENT OF BIDDER RESOURCES AND EXPERIENCE

The Bidder, in order to secure consideration of his Bid, will here submit a statement of work performed similar to that to be done under this proposed contract. He will further mention the larger items of his equipment and organization. He is further invited to submit evidence of his financial ability to perform the work by the stipulated completion date(s).

See attached

Project and Work	Owner's Representative and Phone Number	Engineer or Architect Rep Name and Phone Number	Contract Amount	Completion Date
ODOT 170540 SR 39, Holmes Co Resurfacing	ODOT, District 11, Chuck Sweeny 330-260-2017	ODOT, District 11, Jerred Giauque, 330-308-3996	$ 1,804,741.51	07-2018
Medina Co-Greenwich Rd	Medina Co Commissioners,144 N Broadway, Medina OH 44256 330-723-3641	Andy Conrad, PE, PS 330-723-9559	$ 1,849,928.65	10-2018
Holmes Co Sales Tax Project-Paving	Holmes County Commissioners, 330-674-0286	Holmes County Engineer, Chris Young, 330-674-1856	$ 2,730,552.11	09-2018
Stark Co-422 Resurfacing	Stark Co Commissioners 330-451-7371	Stark Co Engineer, Patrick Marx 330-477-6781	$ 758,992.82	08-2018
Summit County 405 Resurfacing	Summit County Engineer, 538 E South St, Akron OH 44311 330-643-2850	Alan Brubaker, PE, PS 330-643-2850	$ 1,911,063.75	07-2017
Stark County-422 Resurfacing	Stark Co Commissioners 330-451-7371	Stark Co Engineer, Patrick Marx 330-477-6781	$ 548,215.56	09-2017
Holmes County Road Paving Project	Holmes County Commissioners, 330-674-0286	Holmes County Engineer, Chris Young, 330-674-1856	$ 2,363,188.61	09-2017
ODOT 170093 Holmes Co	ODOT, District 11, JD Marlatt , 330-260-0648	ODOT, District 11, Todd Moore, 330--339-6633	$ 1,564,909.74	06-2017
Holmes County -Chip & Seal	Holmes County Commissioners, 330-674-0286	Holmes County Engineer, Chris Young, 330-674-1856	$ 895,081.05	08-2016
Stark County-422 Resurfacing	Stark Co Commissioners 330-451-7371	Stark Co Engineer, Patrick Marx 330-477-6781	$ 607,450.00	09-2016
Medina County-405 Resurfacing	Medina County Commissioners 330-723-3641	Medina County Engineer, Bill Viovode 330-764.8780	$ 863,094.00	09-2016
Holmes County Trail Buggy/Bike Path Phase 1 and 4 Repair Project	Holmes County Park District, 1 Trail Drive, Suite B Millersburg OH 44654	Linn Engineering Inc., 534 Market St, Zanesville OH 43701 740-452-7434	$ 280,238.06	09-2015
Summit County-405 Resurfacing	Summit County Engineer, 538 E South St, Akron OH 44311 330-643-2850	Alan Brubaker, PE, PS 330-643-2850	$ 1,022,669.50	09-2015
Ohio Dept of Transportation-Ashland	ODOT-District 3, 906 Clark Ave, Ashland OH 44805 419-281-0513	Robert Weaver, PE, PS 419-207-7155	$ 896,167.40	09-2015
Stark County-422 Resurfacing	Stark Co Commissioners 330-451-7371	Stark Co Engineer, Patrick Marx 330-477-6781	$ 626,097.20	08-2015
Medina County-405/422 Resurfacing	Medina Co Commissioners,144 N Broadway, Medina OH 44256 330-723-3641	Andy Conrad, PE, PS 330-723-9559	$ 2,438,389.20	08-2015
ODOT Project 14-0381 Hol US 62	ODOT, District 11, JD Marlatt, 330-260-0648	ODOT, District 11, Todd Moore, 330-339-6633	$ 3,001,005.45	12-2014
Stark County H-3 2014 Cold Mix Project	Stark County Commissioners 330-451-7371	Stark Co Engineer, Patrick Marx 330-477-6781	$ 786,547.62	09-2014
Medina County 405 & 422 Project	Medina County Commissioners 330-723-3641	Medina County Engineer, Bill Viovode 330-764-8780	$ 1,456,667.16	09-2014
Holmes County Road 77 Resurfacing Phase II	Holmes County Commissioners, 330-674-0286	Holmes County Engineer, Chris Young, 330-674-1856	$ 232,718.95	09-2013
ODOT Project 13-8020, Resurfacing Rt 39	ODOT, District 11, JD Marlatt, 330-260-0648	ODOT, District 11, JD Marlatt, 330-260-0648	$ 4,043,318.20	10-2013
Holmes County Road 77 Resurfacing Phase III	Holmes County Commissioners, 330-674-0286	Holmes County Engineer, Chris Young, 330-674-1856	$ 232,631.50	09-2013

Equipment

OP	
431	82 Babcock-Allot Paver
433	88 Blaw-Knox RoadWidner
440	02 Roadtec Paver
442	Barber-Green BG200 Paver
443	05 Roadtec Paver
444	00 Blaw-Knox RoadWidner
445	02 CedarRapids Trnsfr Mach
446	86 Midland Paver
447	01 Midland Paver
449	16 Paver
451	16 Carlson Paver
452	Midland Road Widner SPR6
652	73 Galion Grader
658	88 Allatt Grader
669	Allet 200G Motor Grader
676	98 Wirtgen Pavement Prof.
681	07 Terex/CMI Pulverizer
682	98 Champion 750A Grader
683	06 Bomag MPH122-2 Reclaimer
685	08 Wirtgen Reclaimer
687	CAT 304E Mini Hoe
690	2014 Cat Grader 12M2
691	Noram Grader 65E2
915	99 Cat 966G Loader
923	John Deer Loader
938	Dozer

OR	
547	89 Bomag BW120AD Roller
548	Dresser Roller w/Ropps
549	Dresser Roller w/Ropps
550	Galion Trench Roller
551	91 Bomag 120AD1 Roller
553	90 Dynapac CS15 Roller
554	91 Hyster C530A Rt Roller
559	01 Bomag BW120AD-3 Rllr
560	06 Bomag BW120AD-4 Rllr
561	Hypac C530AH Rt Roller
562	06 Cat CS563E Pad Foot Rllr
564	10 Bomag BW11RH Rt Rllr
565	00 Hypac 9 Wheel Roller
566	Bomag BW211D-40
567	15 Bomag BW120AD-4 Rllr
568	01 Bomag Roller
569	Cat CB54 Roller
570	14 Bomag Roller
663	95 Case 1845C Skid Steer
665	99 Case 1845C Skid Steer
672	01 Cat 236 Skid Steer
675	02 Cat 236 Skid Steer
678	08 Cat 256C Skid Steer
680	12Cat Skid Steer
686	16 Cat Skid Steer
689	Skid Steer

OT	
448	14 Etnyre Chip Spreader
450	16 Etnyre Chip Spreader
649	Cat Broom SSL Bull8B
662	93 John Deere Broom 5300
673	00 Rosco Chall. II Broom
679	05 Rosco Chall.II Broom
684	12 Rosco Broom
688	14 Rosco Chall. 6 Broom
881	Kalamazoo Striper

DT	
218	88 Intl S/A Dump
219	90 Intl T/A Dump (2654)
220	95 Mack RD688S
224	92 KW T-450 Dump
227	07 KW T-800 Dump
228	05 Mack Slinger Dump
229	06 KW T-800 Dump
230	08 KW T-800 Dump
231	08 KW T-800 Dump
232	91 GMC TopKick Dump (Choke)
233	16 KW T-880 Dump
234	16 KW T-880 Dump
235	16 KW T-880 Dump
236	17KW T-880 Dump
237	18 KW T-880 Dump
238	18 T-880 Dump Truck

SB	
313	KW T880 Distributor
314	16 KW T880 (Tar Tk)
316	00 GMC 8500 Distributor
317	13 KW T-800 Distributor
318	08 KW T-800 Distributor
322	90 KW T-450 Distributor
336	95 KW T-450 Distributor
302	96 Freightliner Water Truck
315	02 Mack Water Truck
894	Crackfiller

PS approved 01-10-19

[EXHIBIT C]

THE 2019 BRUNSWICK HILLS TOWNSHIP ROAD BID

MEDINA COUNTY, OHIO

NON-COLLUSION AFFIDAVIT

STATE OF OHIO)

COUNTY OF Holmes) ss.

Steve Schlabach, being first duly sworn, deposes

and says that he/she is President of
(Sole Owner, Partner, President)

Melway Paving Co., Inc, the party making the foregoing proposal or bid; that such bid is genuine and not collusive or a sham; that said bidder has not colluded, conspired, connived, or agreed, directly or indirectly, with any bidder or person, to put in a sham bid, or that such other person shall refrain from bidding, and has not in any manner, directly or indirectly, sought by agreement or collusion, or communication or conference, with any person, to fix the bid price of affiant or any other bidder, or to fix any overhead, profit or cost element of said bid price, or of that of any other bidder, or to secure any advantage against the Brunswick Hills Township Trustees or any person or persons interested in the proposed contract, and that such bidder has not, directly or indirectly, submitted this bid, or the contents thereof, or divulged information or data relative thereto to any association or to any member or agent thereof.

Affiant

Sworn to and subscribed before me this day of

March 21, 20 19.

Notary Public in and for

(seal)

Holmes County, State of Ohio

My commission expires

Dlann Root
Notary Public, State of Ohio
My Commission Expires
October 21, 2020

[EXHIBIT D]

PERSONAL PROPERTY TAX VERIFICATION AFFIDAVIT

Now comes the bidder, Melway Paving Co., Inc.,

upon a competitive bid for 2019 Brunswick Hills Township Road Bid

on the 21st day of March, 2019, and

first being duly sworn deposes and says that he / she / it was not

(was or was not)

charged at the time the bid was submitted with any delinquent personal property taxes on the general tax list of personal property of Medina County.

(If applicable), the amount due and unpaid delinquent personal property tax

$_____. Further Affiant Sayeth Naught.

(signature)

Steve Schlabach-President

(title)_____

Sworn to before me this 21st day of March, 2019

Diann Root

Notary Public, State of Ohio

NOTARIAL SEAL STATE OF OHIO

Diann Root
Notary Public, State of Ohio
My Commission Expires
October 21, 2020

My Commission expires:

(THIS AFFIDAVIT MUST BE COMPLETED BEFORE A CONTRACT MAY BE ENTERED INTO UNDER OHIO REVISED CODE CHAPTER 5719.042)

[EXHIBIT E]

INDEPENDENT CONTRACTOR INDEMNIFICATION CLAUSE

The contractor and the owner mutually agree that the relationship formed by this agreement is intended to be that of customer and independent contractor, and is not an employment relationship. The contractor hereby represents that it is not an entity over whom the National Labor Relations Board has ever declined jurisdiction.

The contractor further agrees and covenants that, should a safety issue or complaint arise from, or involving, an employee, agent or representative of the contractor; the contractor will indemnify and hold the owner harmless, and will assume all legal and financial responsibility for said issue or complaint including, but not limited to, all fines, fees, costs, corrective action, provision of equipment, training and administration.
The contractor further agrees and covenants that, should a safety related issue, suit, or complaint be filed against the owner by an employee, agent, or representative of the contractor, the contractor will pay all associated costs of the owner, as the owner deems necessary, in order to defend, correct, or resolve said issue or complaint.

Signed: Melway Paving Co., Inc.

Contractor Steve Schlabach-President

03-21-19

Date

SUMMARIZED ENGINEER'S ESTIMATE

2019 BRUNSWICK HILLS TOWNSHIP ROAD BID
FOR
COUNTY SPEC. 402 INTERMEDIATE ASPHALT COURSE &
ODOT ITEM 422 SINGLE CHIP & SEAL
WITH STIPULATED TRAFFIC CONTROL

Proposal No. 1 - T.H. 138 Laurel Road (W.130th to Brunswick City Limits) $ 120,915.40

Proposal No. 2 - T.H. 103 S. Carpenter Road (Sleepy Hollow to Laurel) $ 110,879.29

Grand Total **$ 231,794.69**

SUBMITTED BY: Andrew J. Conrad
Andrew J. Conrad, P.E., P.S.
Medina County Engineer

DATE: 1-16-2019

CONTRACTOR'S
BID STATEMENT AND SUMMATION

2019 BRUNSWICK HILLS TOWNSHIP ROAD BID
FOR
COUNTY SPEC. 402 INTERMEDIATE ASPHALT COURSE &
ODOT ITEM 422 SINGLE CHIP & SEAL
WITH STIPULATED TRAFFIC CONTROL

Proposal No. 1 - T.H. 138 Laurel Road (W.130th to Brunswick City Limits) $ 101,724.55

Proposal No. 2 - T.H. 103 S. Carpenter Road (Sleepy Hollow to Laurel) $ 87,855.20

Grand Total $ **189,579.75**

COMPANY NAME: Melway Paving Co., Inc.

SUBMITTED BY: Steve Schlabach

COMPANY TITLE: President

ADDRESS: 7571 State Route 83

ZIP: Holmesville, OH 44633

PROPOSAL NO. 1 of 2 Proposals

CONTRACTOR'S BID BLANK

To the Board of The Brunswick Hills Township Trustees ;

The undersigned, having full knowledge of the site and specifications for the following proposal, hereby agrees to furnish all services, labor, material and equipment necessary to complete said proposal as specified by the stipulated completion date(s). The undersigned further agrees to accept this total amount bid (based on estimated quantities) and understands that actual payment may vary according to actual quantities used. The unit prices bid shall be applied to actual quantities of materials used to form the basis of final payment. The total of said payments for all individual proposals will not exceed the total amount awarded for the entire contract.

Date of Bid Opening: 1:30 P.M., Ohio Time March 21st, 2019

Date of Completion: September 13th, 2019

For improving T.H. 138 Laurel Road Section West 130th to Brunswick City Limits

Materials identified by 2016 State of Ohio, Department of Transportation, Construction and Material Specifications, January 1, Edition shall prevail.

Length:	3,980	(Feet)	Length:	0.75	(Miles)
Width:	21.0	(Feet)	Choke Aggregate Rate:	10.0	(Lbs/SY)
Area:	9,287	(Sq. Yds.)	Mix Aggregate Rate:	150	(Lbs/SY)
Repair Rate:		(Cu. Yds./Mile)	CMS-2 Rate:	17.5	(Gals/Ton)
Aggr. Rate:	20	(Lbs/SY)	CRS-2 Rate:	0.55	(Gals/SY)

Item	Quantity	Units	Item Description	Unit Cost	Total Cost
407	929	Gals	SS-1 Bit. Tack Coat @ 0.1 Gals/S.Y.	$ 2.00	$ 1,858.00
CS402	826	Tons	2" County Spec. Inter. Course @ 3200 Lbs./C.Y.	75.00	61,950.00
703	46	Tons	No. 9 Limestone Choke at 10 Lbs/SY	19.00	874.00
614	0.75	Miles	Temp. Center Line, Class 2 (CS402 Base Course)	400.00	300.00
422	93	Tons	#8 ACBF Slag Cover Aggr. @20 Lbs./C.Y.	80.00	7,440.00
422	5,108	Tons	CRS-2 Bit. Latex Mod. Seal Coat @ 0.55 Gals/S.Y.	2.20	11,237.60
617	280	Tons	24" Crushed Berm Material (3" Depth)	30.00	8,400.00
643	0.75	Miles	Yellow Water-Based Painted Center Line, Class 1	2,560.00	1,920.00
643	1.51	Miles	White Water-Based Painted Center Line, Class 1	2,045.00	3,087.95
643	30	L.F.	24" White Polyester Painted Stop Line, Class 1	11.90	357.00
604	2	Each	Furnish & Install Survey Monuments, EJIW 2966Z with 2965A Box Cover	555.00	1,110.00
614	1	Lump Sum	Traffic Control – CS402 & Chip Seal	3,190.00	3,190.00
			Grand Total		**$101,724.55**

Company Title: President Telephone: (330) 279-9000 Date: 03-21-19

Company Name: Melway Paving Co., Inc. By: Steve Schlabach

PROPOSAL NO. 2 of 2 Proposals

CONTRACTOR'S BID BLANK

To the Board of The Brunswick Hills Township Trustees ;

The undersigned, having full knowledge of the site and specifications for the following proposal, hereby agrees to furnish all services, labor, material and equipment necessary to complete said proposal as specified by the stipulated completion date(s). The undersigned further agrees to accept this total amount bid (based on estimated quantities) and understands that actual payment may vary according to actual quantities used. The unit prices bid shall be applied to actual quantities of materials used to form the basis of final payment. The total of said payments for all individual proposals will not exceed the total amount awarded for the entire contract.

Date of Bid Opening: 1:30 P.M., Ohio Time March 21st, 2019

Date of Completion: September 13th, 2019

For improving T.H. 103 South Carpenter Road Section Sleepy Hollow Road to Laurel Road

Materials identified by 2016 State of Ohio, Department of Transportation, Construction and Material Specifications, January 1, Edition shall prevail.

Length:	3,464	(Feet)	Length:	0.66	(Miles)
Width:	21.0	(Feet)	Choke Aggregate Rate:	10.0	(Lbs/SY)
Area:	8,083	(Sq. Yds.)	Mix Aggregate Rate:	150	(Lbs/SY)
Repair Rate:		(Cu. Yds./Mile)	CMS-2 Rate:	17.5	(Gals/Ton)
Aggr. Rate:	20	(Lbs/SY)	CRS-2 Rate:	0.55	(Gals/SY)

Item	Quantity	Units	Item Description	Unit Cost	Total Cost
407	808	Gals	SS-1 Bit. Tack Coat @ 0.1 Gals/S.Y.	$ 2.00	$ 1,616.00
CS402	719	Tons	2" County Spec. Inter. Course @ 3200 Lbs./C.Y.	75.00	53,925.00
703	40	Tons	No. 9 Limestone Choke at 10 Lbs/SY	19.00	760.00
614	0.66	Miles	Temp. Center Line, Class 2 (CS402 Base Course)	400.00	264.00
422	81	Tons	#8 ACBF Slag Cover Aggr. @20 Lbs./C.Y.	80.00	6,480.00
422	4,446	Tons	CRS-2 Bit. Latex Mod. Seal Coat @ 0.55 Gals/S.Y.	2.20	9,781.20
617	244	Tons	24" Crushed Berm Material (3" Depth)	30.00	7,320.00
643	0.66	Miles	Yellow Water-Based Painted Center Line, Class 1	2,560.00	1,689.60
643	1.32	Miles	White Water-Based Painted Center Line, Class 1	2,045.00	2,699.40
604	1	Each	Furnish & Install Survey Monuments, EJIW 2966Z with 2965A Box Cover	555.00	555.00
614	1	Lump Sum	Traffic Control – CS402 & Chip Seal	2.765.00	2,765.00
			Grand Total		**$ 87,855.20**

Company Title: President Telephone: (330)279-9000 Date: 03-21-19

Company Name: Melway Paving Co., Inc. By: Steve Schlabach

2019 BRUNSWICK HILLS TOWNSHIP ROAD BID
FOR
COUNTY SPEC. 402 INTERMEDIATE ASPHALT COURSE & ODOT ITEM 422 SINGLE CHIP & SEAL WITH STIPULATED TRAFFIC CONTROL

SUPPLEMENTAL SPECIFICATIONS

I. PROJECT SCOPE

Bids are requested for County Spec. 402 Intermediate Asphalt Course & ODOT Item 422 Single Chip & Seal with stipulated Traffic Control on 1.41 mile of roads in Brunswick Hills Township, Medina County, Ohio.

Application rate for the ODOT Item 422 seal coat included in the individual proposals can/should be adjusted by the Contractor to rates appropriate to the conditions he finds at the time of application. At no time shall the adjusted rates exceed those specified without **prior** approval by the Brunswick Hills Township Trustees.

The Township reserves the right to eliminate, increase or decrease the estimated quantities of any line item or to non-perform any lump sum item.

The Contractor shall be capable of adjusting to these demands and perform any additional work as directed by the Board of Trustees or their representative.

The Contractor will be responsible for suppling all aggregate needed for the project.

II. PROJECT STARTUP/COMPLETION

Before construction starts on any portion of this project, the Township shall notify all emergency agencies, post offices, the local school district, and residents affected by the improvement and advise each of the estimated time that the project is expected to take.

Work shall be completed to the satisfaction of the Township and the road(s) shall be opened by **September 13th, 2019**. Should the work not be complete by **September 13th, 2019**, the contractor may be subjected to pay liquidated damages at the rate specified in ODOT 108.07, in addition to the costs incurred by the Township for inspection supervision and other related engineering expenses.

Any request for extension of the completion date must be made by the contractor, in writing, fifteen (15) days prior to the original completion date. The Contractor shall state reasons for and the number of days requested for the extension.

The Contractor shall supply sufficient proof of the need for extension such as diary of days lost due to extraordinary weather, extra work authorized by the Township, and/or circumstances beyond control. The Township will only consider an extension of completion after receiving a written request. Extension of the completion date shall only be given upon the approval of the Board of Township Trustees.

Delays caused by Contractor scheduling conflicts and Contractor ordering of materials will not be considered as grounds for extension approval.

III. SPECIFICATIONS & TERMS

The Construction & Material Specifications of the State of Ohio, Department of Transportation (CMS) (latest edition as of the date of advertisement), excluding sections 102 and 103 titled "Bidding Requirements and Conditions" and "Award and Execution of Contract" shall serve as standard specifications for contract work awarded hereunder. Said Construction & Material Specifications are referenced herein as the "Standard Specifications". Requirements, terms, conditions and covenants of the Contract, Instructions to Bidders, Supplemental Specifications, and Bid Documents shall control over conflicting terms found in the Standard Specifications. Wherever in the contract documents reference is made to the CMS, the provisions of the referenced Item shall have the full force and effect as if rewritten herein.

However, the method of measurements, basis of payment, and pay items shall be directed in the material specifications or bid proposal forms. The Contractor shall be responsible for providing his own copy of the CMS.
Wherever the following terms appear in the Standard Specifications, said terms shall have the following meaning:

A. The terms "State", "State of Ohio", "Department", and "Department of Transportation" refer to the Township, acting through its Board of Trustees.

B. The terms "Director" and "DDD" refers to the Board of Township Trustees or it's duly authorized representative.

C. The terms "DCE" and "Engineer" refers to the Medina County Engineer fulfilling his statutorial obligation to the Brunswick Hills Township Board of Trustees.

D. The term "Laboratory" refers to such testing laboratory or consultant as shall be designated by the Board of Township Trustees or it's duly authorized representative.

A numerical designation for an "Item" referenced herein refers to the description of said Item Number as provided by the Standard Specifications. Bidders are specifically referred to the definitions provided by section 101.03 of the Standard Specifications. Any undefined trade and technical words and terms shall be deemed to have the meaning established by trade usage in the highway/bridge construction and civil engineering consultation business.

All work and materials furnished shall conform to the CMS, unless otherwise indicated in the Supplemental Specifications or as directed by the Board of Township Trustees. Materials and/or products used for this project shall have their specifications submitted to the project coordinator at the pre-construction meeting for review.

IV. OTHER CONTRACTOR DUTIES

In addition to the duties cited by the Standard Specifications and elsewhere in these Bid Documents, the Contractor has the following duties:

A. The Contractor shall diligently protect and preserve all stakes, paint marks, bench marks and survey monuments set or used by the Township or County, and shall be responsible for securing therefrom proper lines, stationing and check of application rates for the resurfacing work to be performed. All necessary control lines and grades will be given to the Contractor by the Township. The Township will provide construction staking as needed by the Contractor. There will be no cost to the Contractor, if proper advance notice (5 working days) is given. Request for construction staking can be made through the Project Coordinator. If it is necessary to reset any stakes which have been disturbed, the Contractor must pay the Township all such costs of

re-staking at the rate of One-Hundred Dollars ($100.00) per hour.

B. At least two working days prior to commencing construction operations in an area which may involve underground utility facilities, the Contractor shall notify the Project Coordinator, the Ohio Utility Protection Service (1-800-362-2764), the Oil and the owners of each underground utility facility, to allow surface marking of facility locations.

V. **INSPECTION**

The Board of Township Trustees and duly authorized assistants and agents, shall have, at all times, immediate access and right to enter upon the Work site and other Work premises occupied by the Contractor. The Contractor shall provide safe and proper facilities for permitting such entrance and for inspecting and testing purposes. Subcontractors shall have similar obligations imposed by subordinate contracts. Suppliers shall allow access for inspection and/or testing for materials being utilized as part of the contract. The Contractor shall furnish the Township with all reasonable facilities for ascertaining that the materials and Work are in accordance with the requirement and intention of the Specifications and contract, even to the extent of uncovering or removing portions of finished Work.

The Contractor shall give definite information, at any time, as to the place from which, or persons from whom, any material is being or will be procured. All materials to be used may be subjected to such tests as the Board of Township Trustees may require to assure that such materials conform, in all respects, to the requirements of the Specifications, or that they are equal in quality to samples submitted by the Contractor. All materials which do not conform to such requirements shall be rejected, and the Contractor shall remove such rejected materials from the vicinity of the Work within twenty-four (24) hours thereafter. All material used on the project must be available for inspection by the Board of Township Trustees at least forty-eight (48) hours before installation.

The inspection and supervision of the Work and materials by the Board of Township Trustees, assistants, and inspectors is intended to aid the Contractor in accomplishing the fulfillment of duties and obligations under the contract, but such inspection and supervision shall not relieve the Contractor from contract obligations, absent written waiver by the Board of Trustees.

Defective Work shall be made good and unsuitable materials may be rejected, notwithstanding that such Work and materials have been previously overlooked by the Board of Township Trustees and accepted for estimated for payment. If the Work, or any part thereof, is found, at any time before the acceptance of the whole Work and for the period of the Maintenance Bond thereafter, to be defective, or to contain defective materials, the Contractor shall make good such defects under the direction of the Board of Township Trustees.

The Contractor shall schedule inspection a minimum of twenty-four (24) hours in advance of the performance of the respective Work. At the pre-construction meeting, the Board of Township Trustees shall provide to the Contractor with phone numbers and names of a contact person and of the Board of Township Trustees's inspectors. The Contractor shall inform the Board of Township Trustees of his Work schedule and the hours that Work will be performed. The Board of Township Trustees shall approve the Contractor's schedule and hours of operation before the Contractor may begin Work.

When work is scheduled and the Contractor desires to change the approved schedule, the Contractor shall contact the Board of Township Trustee's inspector at or before 7:30 a.m. of the scheduled Work date to cancel or adjust the hours of inspection. If the Contractor fails to contact the Board of Township Trustee's inspector as stated above or if the notice is within two (2) hours

of the scheduled inspection and is insufficient to cancel attendance by the Board of Township Trustee's inspector, the Contractor may be charged for two (2) hours of inspection time at the rate of fifty (50) dollars per hour.

VI. CHANGES IN QUANTITY OF WORK

The material quantities as given in the Estimated Quantities are approximations only. The Township Trustees shall have the power to alter by increasing, decreasing or deleting the quantities of Work to be done, either before or after the commencement of construction.

If such change involves the reduction or omission of any material or Work called for in the original Bid Documents or Specifications, there shall be no right with the Contractor for any claims for losses or damages, or for loss of profit, growing out of such omission. If any such change involves additional material or labor, upon which the price is fixed in the Contract, that price shall govern. Any such change shall in no way relieve the Contractor of or affect any of the obligations hereunder.

VII. NIGHT, SUNDAY & HOLIDAY WORK

No Work requiring the presence of the Board of Township Trustee's inspectors will be permitted from 9:00 p.m. through 7:00 a.m. or on Saturday, Sunday or Holidays, except in a case of an emergency, and then only to such an extent as is absolutely necessary and by written permission of the Board of Township Trustees.

VIII. SUBCONTRACTING

All subcontractors must be approved by the Board of Township Trustees. The Contractor shall submit a written list of subcontractors and suppliers that he intends to use to the Board of Township Trustees prior to the signing of the final contract agreement. The list shall include contact name, address, cell number and office contact information.

IX. CHANGE ORDER

No deviations from the original Bid Documents and specifications set forth herein shall be authorized unless done so in writing, signed by the Board of Township Trustees specifying the exact cost of such change.

X. PAYMENT

Payment(s) shall be made in conformity to Chapter 153 of the Ohio Revised Code.

XI. PRE-CONSTRUCTION MEETING

Shortly after the contract is awarded, a pre-construction conference may be arranged to discuss the scheduling and performance of the work. The prime Contractor and each of his Subcontractors shall attend the conference. The prime Contractor shall provide at pre-construction meeting a list of the products to be used, subcontract contact information, and construction progress schedule.

XII. PRE-BID INQUIRIES/ PROJECT COORDINATOR

Any questions regarding the contents of these bid specifications should be directed to:

Dan Becker, Project Engineer
Medina County Engineer's Office
791 West Smith Road
Medina, Ohio 44256
(330) 723-9662

Questions regarding this project, scheduling a pre-construction meeting, etc. should be directed to the Township Service Department through:

Paul Magovac, Road Supervisor
(330) 220-4784

Questions concerning administrative needs, e.g. invoicing, payments, prevailing wage rates, contract agreements, etc. should be directed to the Township Trustees through:

Katherine Esber, Brunswick Hills Township Fiscal Officer
1918 Pearl Rd.
Brunswick Hills, Ohio 44212
(330) 220-8182

XII. BASIS OF PAYMENT: MATERIAL QUANTITIES

The accumulated quantities of each material used to complete these individual operations shall be totaled and tabulated by proposal. Payment will be the Unit Price Bid times the quantity of material ticketed and approved to complete each proposal.

Said Unit Price and payment shall be full compensation for furnishing and placing all materials unless otherwise noted.

XIII. MATERIALS

A. BITUMINOUS PLANT MIX

Item County Spec (C.S.) 402 - Asphalt Concrete Base Course

1. Bituminous Hot Mix Asphalt material specified as (County Spec.) CS 402 shall meet the appropriate requirements of ODOT Item 441 with the following exceptions:

   A. All coarse aggregates used in these proposals will be crushed limestone and will conform to 703. The use of recycled aggregates or pavement grindings in plant mix is prohibited.

   B. Coarse and fine aggregates shall be combined such that the resulting blend shall be within the following limits:

Sieve	Total Percent Passing
1"	100
3/4"	85-100
3/8"	20-45
No. 4	15-30
No. 16	10-25
No. 50	3-15
No. 200	0-5
PG 58-28	4.3%

C. Successful proportioning has been achieved using No. 67 large aggregate and natural sand being limited to approximately 10% of the total mix weight.

D. Previous experience has shown that proper proportioning will achieve a yield of approximately 3,200 lbs. per cubic yard.

E. Estimated quantities illustrated on the accompanying Contractor's Bid Blanks are derived using this 3,200 lb. per cubic yard conversion factor.

F. Allowance deviation of bitumen content from the target value be limited to + or - 0.3 percent.

G. The quantity of bitumen added may be adjusted by the Contractor within the specified limits to produce a satisfactory mixture.

2. Preparing Existing Surface

A. Power-brooming should be sufficient preparation for all portions of the road surface being resurfaced.

B. Butt Joints may be needed at the start and ending of the resurfacing and at all intersections. The costs incurred to perform the subsequent butt joint operation are incidental to this item.

C. The cleaned surface will be tacked pursuant to Item 407 included in the accompanying bid blanks prior to resurfacing.

D. The Contractor will be required to string the edge of any course where his operator is unable to produce a continual straight pavement edge satisfactory to the Engineer.

3. Application and Finishing:

A. Pavement mixtures shall be spread and finished in accordance with 401.15 except that the weight to volume conversion factor derived by the mixture's specific JMF shall apply.

B. The spreading operation shall be achieved through the use of a full-size, self-propelled paver per 401.12 having a basic heated screed width of 10 feet, adjustable hydraulic side extensions, and proper overall size and weight to maintain uniform profile grade and continual material placement.

C. Resurfacing will be restricted to paving each travel lane separately. Full-width paving of the entire pavement surface will not be allowed.

D. The longitudinal joint from any one day's resurfacing shall not remain open for more than 24 hours. Any accumulated stone against said joint shall be power-broomed away before the joint is closed.

4. Rolling

A. Rollers shall conform with 401.13 and there will be a minimum of two rollers incorporated in the paving train. Additional rollers may be necessary should the speed of the resurfacing warrant.

B. Rollers may be steel tandem, 3-wheel or a combination of pneumatic tire and steel tandem at the discretion of the Contractor.

C. Compaction of the mixture shall be in accordance with 401.16. Rolling may be delayed to avoid excessive lateral displacement in deeper thicknesses of the overlay if directed by the Engineer. Final rolling shall be continued until roller marks are eliminated.

B. **ITEM 422 CHIP & SEAL APPLICATION**

422.02 Materials -

1. Item 422 (CRS-2/RS-2 Bituminous Seal Coat) will be refined from asphaltic base crude, applied at the rates stipulated on the individual bid proposals and shall conform to 702.04.

2. All seal coats will incorporate a modified emulsion containing a liquid latex additive of no less than 3% of the total volume applied.

3. Cover aggregates used in these proposals will be No. 8 crushed air-cooled blast furnace slag and will conform to 703.05.

422.05 Test Strip -

Construction of a test strip will not be required to determine initial application rates. The target application rates for the Binder and Cover Aggregate are included in the Contractor's Bid Blank(s).

Adjustments to the application rates can and should be made by the Contractor to rates appropriate to the conditions found at the time of application and are to be made in accordance with 422.07 and 422.08.
At no time shall the adjusted rates exceed those specified on the Contractor's Bid Blank(s) without prior approval by the Engineer.

422.09 Construction Operation -

The sealed surface shall be power-broomed within 24 hours of the initial application to remove excess aggregate. Additional costs incurred to perform the subsequent brooming operation are incidental to this item. All drive aprons that receive CS402 will be chip & sealed.

422.10 Quality Control -

1. The Township may sample any bituminous materials used.

2. It will be the Contractor's responsibility to collect these samples, representative of his production when directed by the Inspector.

3. Samples will be taken in the presence of the Township's Inspector at the job site of each course unless otherwise instructed.

4. The completed samples become the property of the Township.

5. These samples may be tested by the Township at an independent testing laboratory.
6. Determination of mix compliance will be derived from the results of these tests.

7. Failure of a product to meet the requirements of its applicable specifications may result in non-acceptance of the work and subject the Contractor to possible penalty deemed appropriate by the Brunswick Hills Township Trustees after consultation with the Medina County Engineer.

422.13 Basis of Payment -

Item 422.12 will not be used as a method of measurement for payment. The Township will pay for accepted quantities at the contract prices for the actual number of tons of aggregate and the actual number of gallons of bituminous material placed, completed, and accepted.

Permanent Traffic Paint

1. Pavement markings shall be fast dry, water based paint ready-mixed and comply with Item 740 of the CMS.

2. Glass beads shall conform to Item 740.03 Type B and will be applied at a rate not less than 15 pounds per hundred square feet in accordance with Item 642.04.

3. Official striping logs are available through the Township.

XIV. TICKETING, MATERIAL SAMPLING & TESTING

A. TICKETING

Payment will depend on an accurate and disciplined collection of weight tickets accumulated during the construction of individual Items to complete each proposal.

Consequently, the Township will require tickets daily for all materials delivered to the project site.

Surplus portions of any material remaining in a truck at the end of the completed day's work or proposal shall be re-weighed, ticketed and a duplicate copy of said ticket presented to the Township's Inspector no later than the start of the next working day.

B. MATERIAL SAMPLING & TESTING

The Township may require at least two (2) sets of twin samples during each day of resurfacing, generally (1) set morning and (1) set afternoon from each course applied.

It will be the Contractor's responsibility to collect these samples representative of his production when directed by the Inspector.

Samples will be taken in the presence of the Inspector at the job site of each course unless otherwise instructed.

The specific method of sampling will be left to the individual discretion of the Contractor except for the following requirements:

1. The completed samples become the possession of the Township.

2. These samples may be tested by the Township in an independent testing laboratory.

3. Determination of mix compliance will be derived from the results of these tests.

4. Failure of a product to meet the requirements of its applicable specification may result in non-acceptance of the work and subject the Contractor to possible penalty as described in the O.D.O.T. Construction and Material Specification Handbook Acceptance Schedule for deviations for the aggregate and as outlined below in the Acceptance Schedule for Asphalt Binder deviations.

Pay Factor	% Deviation from JMF
1.00	0
0.98	0.01-0.20
0.90	0.21-0.30
0.80	0.31-0.40
0.60	0.41-0.50
Remove and Replace	>0.50

The Contractor may have the sister sample retained by the Township tested at his expense by an independent test lab acceptable to both the Board of Township Trustees and the Contractor if he wishes to dispute the original test results. This test result will be binding.

XV. MAINTAINING TRAFFIC

A. **All roads will remain open to local traffic at all times.**

B. The Contractor will erect and maintain "Road Construction-Traffic Maintained" (OC-4) or "Road Work Ahead" (W20-1), "Loose Stone", Special "Shoulder Drop Off" signs & "DO NOT PASS" and "PASS WITH CARE" signs along the project, as well as at intermediate intersections. **These signs will be left up in place until all work is completed and approved.**

C. The Contractor will erect and maintain supplemental traffic control devices, Type III barricades, and flagger(s) on specified stationary and mobile supports of sufficient strength, stability and reflectorized with Type G sheeting in compliance with the "Ohio Manual of Uniform Traffic Control Devices" and the Ohio Department of Transportation, "Temporary Traffic Control Manual", 2005 edition.

D. Flaggers will wear proper attire, utilize a "Stop/Slow" paddle and maintain a "Flagger Ahead" sign (W20-7) or (W20-7a) on a mobile support no less than 150 feet in advance of his/her stationary position.

E. Mobile signs shall be repositioned to appropriate locations periodically during the workday.

F. Additional flaggers will also be required if a construction train becomes too long or when the construction train approaches within 100' of an intersecting roadway, commercial driveway or other major access.

G. Any hazard created through the actions of the Contractor will prompt the Contractor to make additional efforts to protect the general public. Contractor will bear any additional expenses to provide this protection.

H. If it becomes necessary for the Township to supplement any proposal with traffic control normally provided by the Contractor, the acting authority will invoice the Primary Contractor of all costs incurred plus a 10% penalty.

I. Figure No.1 will be considered the minimum traffic control required to conduct traffic around the paving train.

J. It is the responsibility of the Prime Contractor to have the necessary traffic control devices and flagger(s) on these work sites prior to the start of any work. Failure to do so is sufficient cause for the Township to suspend work.

K. **At no time will the Township allow work to be done on both lanes of the road at the same time.**

XVI. MISCELLANEOUS CONSTRUCTION INCIDENTALS

The Primary Contractor will be held responsible for damages caused by him or his Subcontractors to any private drives, personal property, or overhead utilities resulting from associated construction work on this contract. He will also be required to repair what the County Engineer and or Township determines as flawed work at his expense.

XVII. WEATHER CONDITIONS

Application of bituminous materials will NOT be allowed under any of the following conditions:

1. When pavement surface is wet;
2. When air or ground temperature is below 60°F;
3. When weather conditions either threaten or prevent proper handling, mixing, application, or compaction of work to be performed.

XVIII. NEW MONUMENT BOXES

Existing centerline monument boxes (including any that may be buried under the existing pavement surface) will be located and spot painted by the County Surveyor before the pavement planing operation.

At locations where no monument box exists, install a new Medina County monument box after the asphalt concrete surface course has been placed. Contact the Township inspector no less than one week prior to installing new monument boxes so the proposed location can be spot painted in the field.

Use a core drill to cut a cavity for installation of the new monument box, taking care not to disturb the monument pin, and insert an East Jordon Iron Works 2966Z cast iron frame and 2965A frame in the opening. Set the monument box so that the top of the casting and cover will be 1/4" to 1/2" below the asphalt surface course. The void between the frame and the cavity boundary shall be filled with non-shrink mortar conforming to CMS 705.22.

The completed assembly shall be protected by a 1/2 " plywood covering (nailed in place) until the mortar has set sufficiently. Plywood should be no bigger than 3' x 3' square.

The unit price bid for this item shall include all labor, equipment and materials necessary to complete the work described above.

GENERAL NOTES:

FLAGGERS

1. Flaggers, one for each direction, shall be used to control traffic continuously for as long as a one lane operation is in effect. The flaggers shall be able to communicate with each other at all times.

LENGTH OF CLOSURE

2. It is required that the length of closure be kept to a minimum at all times, as directed by the Engineer, with a maximum allowable length of 5000 feet (1520 meters).

   When the ambient Temperature exceeds 80°fahrenheit (27° centigrade), the Engineer may increase the maximum allowable length of closure to allow for sufficient cooling of new pavement.

   The Engineer may shorten the maximum allowable length of closure to relieve excessive traffic backups or to improve traffic operation.

SIGN LOCATION AND SPACING

3A. The minimum spacing between work zone signs is shown in Table 1. Maximum spacing should not be greater than 1.5 times the distances shown in Table 1.

3B. Sign spacing should be adjusted to avoid conflict with existing signs. Minimum spacing to existing signs shall be 200 feet (60 meters) for speeds of 45 mph or less and a minimum of 400 feet (120 meters) for speeds of 50 mph or greater.

3C. The location of the advance warning signs should be adjusted to provide for adequate sight distance for the existing vertical and horizontal roadway alignment.

ADJUSTMENTS FOR SIGHT DISTANCE

4. The location of the flagger station and the advance warning signs should be adjusted to provide for adequate sight distance for the existing vertical and horizontal roadway alignment.

BASIC SIGNING

5A. ROAD WORK AHEAD (W20-1) signs shall be provided on entrance ramps or roadways entering the work limits.

5B. END ROAD WORK (G20-2) signs are only required for lane closures of more than one day. It is intended that these signs be placed on the mainline, on all exit ramps, and on roadways exiting the work limits.

5C. Overlapping of signing for adjacent projects should be avoided where the messages could be confusing. Any W20-1 or G20-2 sign which falls within the limits of another Traffic control zone shall be omitted or covered during the period when both projects are active.

SIGNING DETAILS

6A. The Advisory Speed plaque W13-1 shall be used when specified in the plan.

6B. 36 inch (900 millimeter) warning signs may be used when the approach speed limit is 40 mph or less.

FLASHING WARNING LIGHTS

7. Type A flashing warning lights shown on the ROAD WORK AHEAD (W20-1) signs and on the LANE CLOSED AHEAD (W20-5) signs are required whenever a night lane closure is necessary.

CONES

8A. Cone spacing shall be as follows:
   a) Spacing along the buffer shall be 40 feet (12 meters) center to center.
   b) Spacing along the approach taper shall be 10 feet (3 meters) center to center.

8B. Cone sizes shall be as follows:
   a) Cones used for daytime traffic control shall have a minimum height of 28 inches (0.7 meters).
   b) Cones used for nighttime traffic control shall have a minimum height of 42 inches (1.1 meters).

8C. Provisions shall be made to stabilize the cones to prevent them from blowing over.

8D. A minimum of 2 cones shall be used to close the paved shoulder.

EQUIPMENT/MATERIALS STORAGE

9A. No equipment or material shall be located within the taper or buffer zone.

9B. When no work is being performed, all material and equipment shall be stored as per CMS 614.03.

AREA ILLUMINATION

10A. Adequate area illumination of each flagger station shall be provided at night. Use of portable flood lighting is acceptable.

10B. To ensure the adequacy of floodlight placement and the elimination of glare, the Contractor and the Engineer shall drive through the worksite each night when the lighting is in place. Light placement and shielding shall be adjusted to the satisfaction of the Engineer.

INTERSECTION/DRIVEWAY ACCESS

11. Within the length of closure, provision shall be made to control traffic entering from intersecting streets and major drives as necessary to prevent wrong-way movements and to keep vehicles off of new pavement not ready for traffic. The contractor shall:

   a) Place across the closed lane, either 3 drums (cones) or barricades,
   and/or
   b) Provide an additional flagger at every public street intersection and major driveway.

   Cones (drums) placed across the closed lane shall be located 25 feet (8 meters) beyond the projected pavement edges of the driveway or cross highway. For barricades, see Standard Construction Drawing MT-101.50.

   Existing stop signs shall be relocated as necessary to assure proper location for the traffic conditions.

   The method of control shall be subject to the approval of the Engineer.

CHIP SEAL OPERATION

12. For chip seal operations, additional signing shall be incorporated in the advance warning area.

   a) The LOOSE GRAVEL (W8-7) and FRESH TAR (W21-2) signs shall both be used in advance of the chip seal operation.

   b) Repeat the LOOSE GRAVEL (W8-7) sign with a 35 mph Advisory Speed plaque (W13-1) every half mile per CMS 422.03.

   c) The LOOSE GRAVEL (W8-7) and FRESH TAR (W21-2) signs shall both be used for signing of side roads intersecting the work area.

MT-97.11	OFFICE OF TRAFFIC ENGINEERING	FLAGGER CLOSING 1 LANE OF A 2-LANE HIGHWAY FOR PAVING OPERATIONS (NON-FED ONLY)	10-15-10
2/2			

SMB/LAM

FIGURE NO. 2

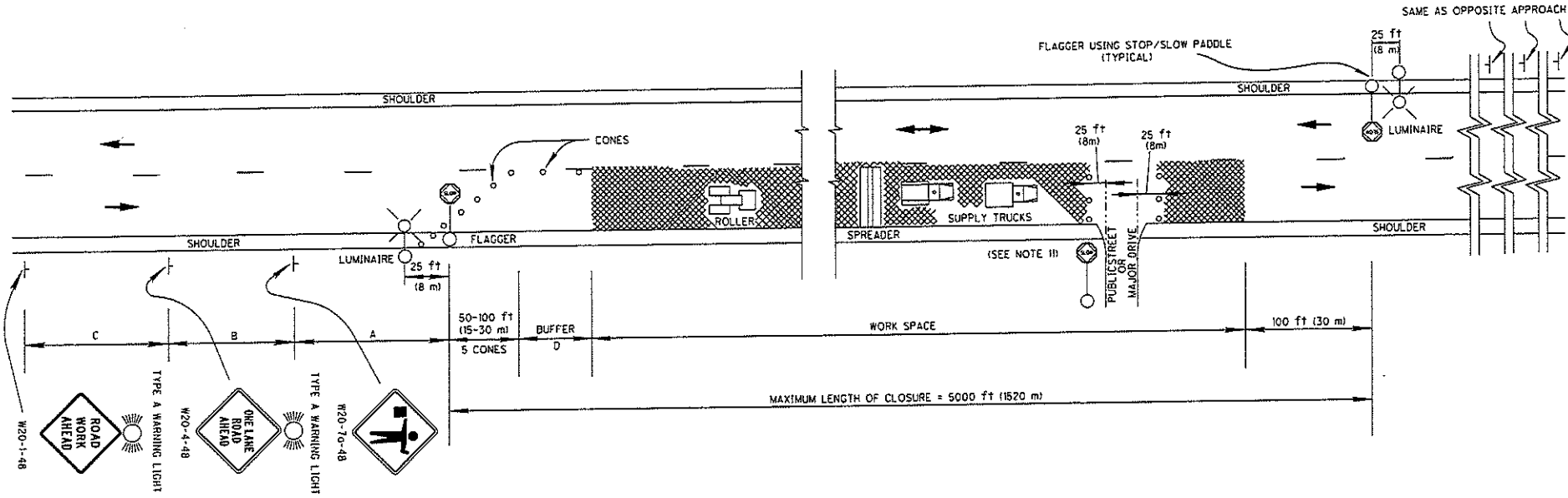

TABLE I (SIGN SPACING)

ROAD TYPE	DISTANCE BETWEEN SIGNS FT(m)		
	A	B	C
TWO-LANE ≤40 MPH	100 (30)	100 (30)	100 (30)
TWO-LANE 45-50 MPH	350 (100)	350 (100)	350 (100)
TWO-LANE 55 MPH	500 (150)	500 (150)	500 (150)

TABLE II

SPEED LIMIT (MPH)	BUFFER (D) FT (m) MINIMUM
25	155 (45)
30	200 (60)
35	250 (75)
40	305 (95)
45	360 (110)
50	425 (130)
55	495 (150)

LEGEND

DRUMS ○○○○○○

DIRECTION OF TRAVEL →

10-15-10

FLAGGER CLOSING 1 LANE OF A 2-LANE HIGHWAY FOR PAVING OPERATIONS (NON-FED ONLY)

OFFICE OF TRAFFIC ENGINEERING

MT-97.11

1/2

SHB/LAM

FIGURE NO. 1

FIGURE 2

2966Z Cleanout/Monument Box Frame

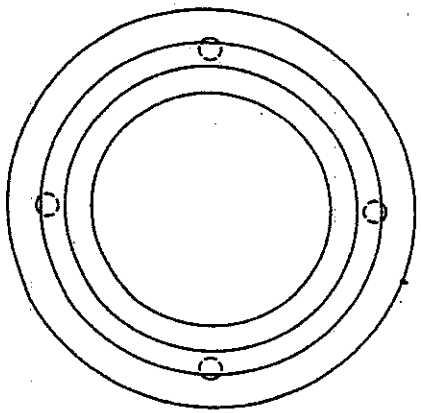

PLAN VIEW

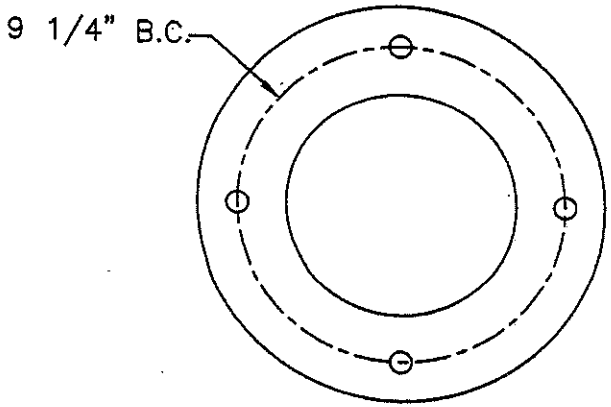

BOTTOM VIEW

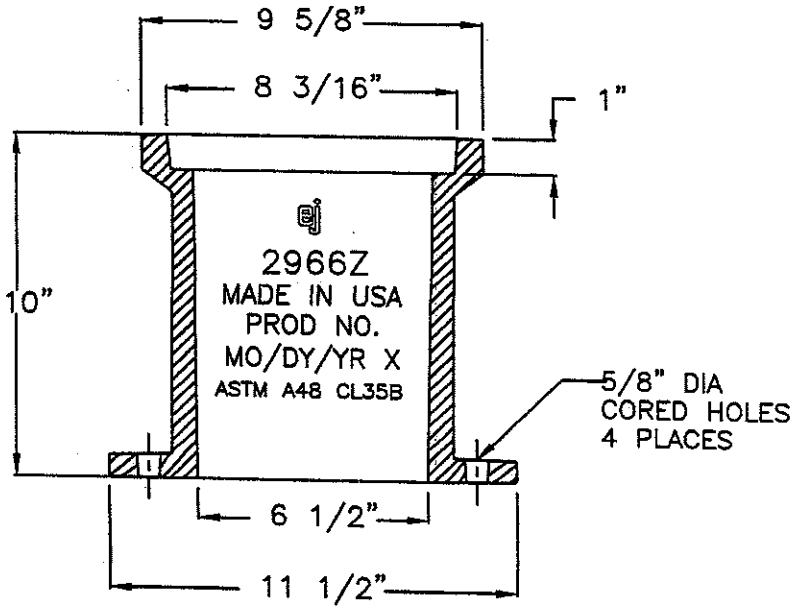

SECTION

Product Number
00296610

Design Features
-Materials
Gray Iron (CL35B)
-Design Load
Heavy Duty
-Open Area
n/a
-Coating
Dipped
- ⊥ Designates Machined Surface

Certification
- ASTM A48
-
-
-Country of Origin: USA

Drawing Revision
04/10/2008 Designer: GAD
10/01/2014 Revised By: DAE

Disclaimer
Weights (lbs./kg) dimensions (inches/mm) and drawings provided for your guidance. We reserve the right to modify specifications without prior notice.

CONFIDENTIAL: This drawing is the property of EJ GROUP, Inc., and embodies confidential information, registered marks, patents, trade secret information, and/or know how that is the property of EJ GROUP, Inc. Copyright © 2012 EJ GROUP, Inc. All rights reserved.

Contact
800 626 4653
ejco.com

FIGURE 2

FIGURE 2

FIGURE 2

2965A Cleanout/Monument Box Cover

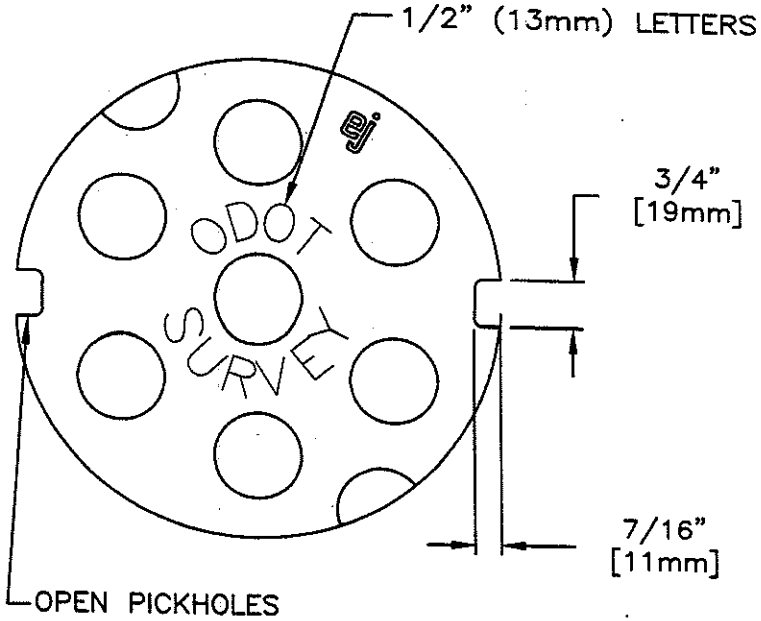

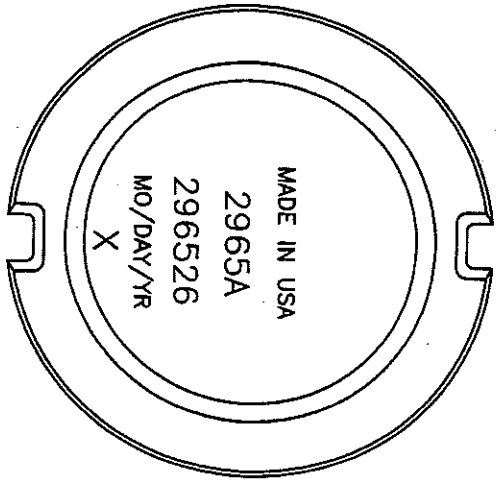

BOTTOM VIEW

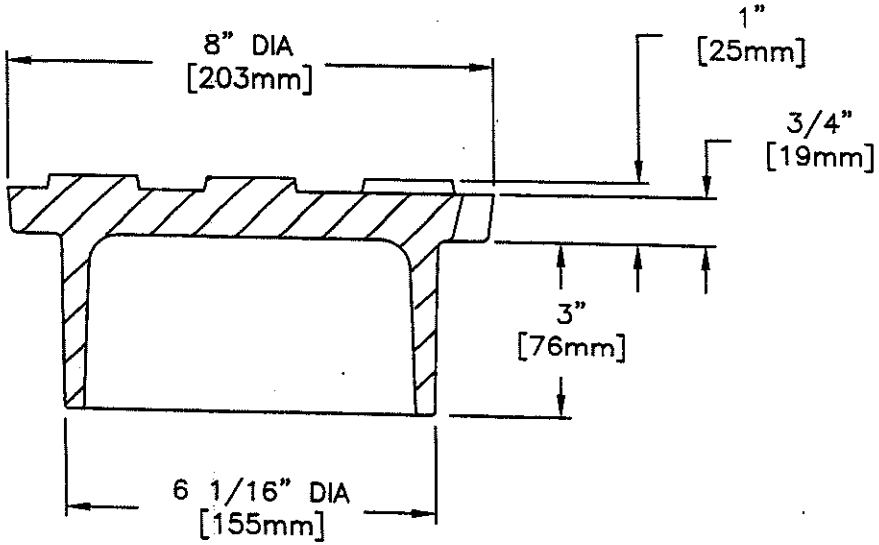

SECTION

Product Number
00296526

Design Features
-Materials
Gray Iron (CL35B)
-Design Load
Heavy Duty
-Open Area
n/a
-Coating
Dipped
- ✓ Designates Machined Surface

Certification
- ASTM A48
-
-
-Country of Origin: USA

Drawing Revision
07/19/2005 Designer: SBB
02/05/2014 Revised By: DVD

Disclaimer
Weights (lbs./kg) dimensions (inches/mm) and drawings provided for your guidance. We reserve the right to modify specifications without prior notice.

CONFIDENTIAL: This drawing is the property of EJ GROUP, Inc., and embodies confidential information, registered marks, patents, trade secret information, and/or know how that is the property of EJ GROUP, Inc. Copyright © 2012 EJ GROUP, Inc. All rights reserved.

Contact
800 626 4653
ejco.com

FIGURE 2

FIGURE 2

Prevailing Wage Determination Cover Letter

County: MEDINA
Determination Date: 02/19/2019
Expiration Date: 05/19/2019

THE FOLLOWING PAGES ARE PREVAILING RATES OF WAGES ON PUBLIC IMPROVEMENTS FAIRLY ESTIMATED TO BE MORE THAN THE AMOUNT IN O.R.C. SEC. 4115.03 (b) (1) or (2), AS APPLICABLE.

Section 4115.05 provides, in part: "Where contracts are not awarded or construction undertaken within ninety days from the date of the establishment of the prevailing wages, there shall be a redetermination of the prevailing rate of wages before the contract is awarded." The expiration date of this wage schedule is listed above for your convenience only. This wage determination is not intended as a blanket determination to be used for all projects during this period without prior approval of this Department.

Section 4115.04, Ohio Revised Code provides, in part: "Such schedule of wages shall be attached to and made a part of the specifications for the work, and shall be printed on the bidding blanks where the work is done by contract..."

The contract between the letting authority and the successful bidder shall contain a statement requiring that mechanics and laborers be paid a prevailing rate of wage as required in Section 4115.06, Ohio Revised Code.

The contractor or subcontractor is required to file with the contracting public authority upon completion of the project and prior to final payment therefore an affidavit stating that he has fully complied with Chapter 4115 of the Ohio Revised Code.

The wage rates contained in this schedule are the "Prevailing Wages" as defined by Section 4115.03, Ohio Revised Code (the basic hourly rates plus certain fringe benefits). These rates and fringes shall be a minimum to be paid under a contract regulated by Chapter 4115 of the Ohio Revised Code by contractors and subcontractors. The prevailing wage rates contained in this schedule include the effective dates and wage rates currently on file. In cases where future effective dates are not included in this schedule, modifications to the wage schedule will be furnished to the Prevailing Wage Coordinator appointed by the public authority as soon as prevailing wage rates increases are received by this office.

"There shall be posted in a prominent and accessible place on the site of work a legible statement of the Schedule of Wage Rates specified in the contract to the various classifications of laborers, workmen, and mechanics employed, said statement to remain posted during the life of such contract." Section 4115.07, Ohio Revised Code.

Apprentices will be permitted to work only under a bona fide apprenticeship program if such program exists and if such program is registered with the Ohio Apprenticeship Council.

Section 4115.071 provides that no later than ten days before the first payment of wages is due to any employee of any contractor or subcontractor working on a contract regulated by Chapter 4115, Ohio Revised Code, the contracting public authority shall appoint one of his own employees to act as the prevailing wage coordinator for said contract. The duties of the prevailing wage coordinator are outlined in Section 4115.071 of the Ohio Revised Code.

Section 4115.05 provides for an escalator in the prevailing wage rate. Each time a new rate is established, that rate is required to be paid on all ongoing public improvement projects.

A further requirement of Section 4115.05 of the Ohio Revised Code is: "On the occasion of the first pay date under a contract, the contractor shall furnish each employee not covered by a collective bargaining agreement or understanding between employers and bona fide organizations of Labor with individual written notification of the job classification to which the employee is assigned, the prevailing wage determined to be applicable to

that classification, separated into the hourly rate of pay and the fringe payments, and the identity of the prevailing wage Coordinator appointed by the public authority. The contractor or subcontractor shall furnish the same notification to each affected employee every time the job classification of the employee is changed."

Work performed in connection with the installation of modular furniture may be subject to prevailing wage.

THIS PACKET IS NOT TO BE SEPARATED BUT IS TO REMAIN COMPLETE AS IT IS SUBMITTED TO YOU. (Reference guidelines and forms are included in this packet to be helpful in the compliance of the Prevailing Wage law.)
wh1500

BEFORE FILING A PREVAILING WAGE COMPLAINT, PLEASE READ CAREFULLY!

You May File A Complaint With This Division If:

A. You were or are employed on the project.
B. You meet one of the following:

- Any person who submits a bid for the purpose of securing the award of a contract for construction of the public improvement.
- Any person acting as a subcontractor of a person mentioned in (B.1.) above.
- Any bona fide organization of labor which has as members or is authorized to represent employees of a person mentioned in (B.1. or B.2.) and which exists, in whole or in part, for the purpose of negotiating with employers concerning the wages, hours, or terms and conditions of employment of employees.
- Any association having as members any of the persons mentioned in (B.1. or B.2.) of this section.

Do Not Fill Out This Form If:

A. The project has been completed for two (2) years.
B. You acted as an "independent contractor" and not as an "employee" of the business, or you were self-employed.
C. You already have a judgement involving the same wage claim.
D. The contractor has filed for bankruptcy. (If so, you will need to contact the Bankruptcy Court for further instructions.)

Filing More Than One Complaint:

A. You must use a separate complaint form for filing against each contractor and/or project.
B. Each claimant intending to file against a contractor and/or project must use a separate complaint form.

Completing The Prevailing Wage Complaint Form:

A. Download or view the form, then print out a copy of the form (it is a legal size document, 8½" by 11").
B. Read all questions on the wage claim form carefully before answering. Please fill out your claim completely, legibly, and accurately. You must sign, date, and have it notarized.
C. Provide the contractor's name, name of business, correct address, county, and telephone number. You as the claimant are responsible for providing this information.
D. To help prove your claim, please provide copies of any documentation you have available. For example, pay stubs or a personal record of hours worked on the project. DO NOT SEND ORIGINALS.
E. Be certain that your name, address, social security number, and telephone number are correct. If you do not have a telephone number, please supply this Division with a telephone number where we can reach you. If your address or telephone number changes, it is your responsibility to notify us immediately or your claim could be closed.

The Prevailing Wage Complaint Form (PDF) can be downloaded here.

CONTACT US

Division of Industrial Compliance & Labor
6606 Tussing Road
Reynoldsburg, OH 43068

Phone 614.644.2223
Fax 614.644.2618
Email IC@com.state.oh.us

Webmaster
Contact the Webmaster for Questions or Comments on the Website:
webmaster@com.state.oh.us

Copyright©2012 Ohio Department of Commerce. All Rights Reserved.

INSTRUCTIONS FOR PREPARING CERTIFIED PAYROLL REPORTS

General

Contractors and subcontractors are required by law to submit certified payroll reports for work on projects covered by Ohio's Prevailing Wage Law. This form meets the reporting requirements established by Ohio Revised Code Chapter 4115. The use of this form is not mandatory, employers may submit their own forms provided that all of the required information is included. This form may be reproduced, or additional copies obtained from:

Ohio Department of Commerce Division of Industrial Compliance and Labor Bureau of Wage & Hour Administration 6606 Tussing Rd. P. O. Box 4009 Reynoldsburg, OH 43068-9009 Phone: (614) 644-2239

Certified Payroll Heading

Employer name and address: Company's full name and address. Indicate if the company is a subcontractor, if so list the name of the General or Prime. Project: Name and location of the project, including county. Contracting Public Authority: Name and address of the contracting public authority. Week Ending: Month, day, and year for last day of reporting period. Payroll # : Indicates first, second, third, etc. payroll filed by the company for the project. Page Indicator: number of pages included in the report. Project Number: Determined by the public authority. If there is no number leave blank.

Information by Column

- 1. Employee Name, Address and Social Security number: This information must be provided for all employees that perform physical labor on the project. Corporate officers, partners, and salaried employees are considered employees and must be paid the prevailing rate. Individual sole proprietors do not have to pay themselves prevailing rate but must report their hours on the project.
- 2. Work Class: List classification of work actually performed by employee. If unsure of work classification, consult the Ohio department of Commerce, Wage and Hour Bureau. Employees working more than one classification should have separate line entries for each classification. Indicate what year/level for Apprentices. Be specific when using laborer and operator classifications; for example, Backhoe Operator or Asphalt Laborer.
- 3. Hours Worked, Day & Date: In the first row of column 3 enter days of pay period example; M T W TH F S S. The second row is for the date that corresponds with each day for the pay period. In the employee information section enter the number of hours worked on the prevailing wage project and which day the hours were worked. Separate rows are labeled for (ST) straight time hours and (OT) overtime hours. All hours worked after 40, must be paid at the appropriate overtime rate.
- 4. Project Total Hours : Total the hours entered for pay period.
- 5. Base Rate: Enter actual rate per hour paid to the employee. The overtime hourly rate is time and one-half the base rate listed in the prevailing wage schedule plus fringe benefits at straight time rate. The prevailing wage schedule lists the base rate plus fringe benefit amounts. These amounts added together equal the total prevailing wage rate. Employers must pay this total amount in one of three ways.
  - Total rate may be paid in entirety in the base rate to the employee; in which case, the cash designation will be checked for fringe benefits.
  - Total rate may be paid as listed in prevailing wage rate schedule with total fringe amounts paid approved plans.
  - Total rate may be paid with a combination of base rate and fringe payments to approved plans in amounts other than those listed in schedule.
- 6. Project Gross: Enter total gross wages earned on the project for straight time and overtime. Project hours X base rate should equal project gross.
- 7. Fringes: If fringe benefits are paid in the hourly base rate, indicate this by marking the cash space. If fringe benefits are paid to approved plans as listed in the prevailing wage rate schedule, mark the space Approved Plans. If fringe benefits are paid partially in the base rate and partially to approved plans, mark the space Cash & Approved plans. List the hourly amount paid to approved plans for each fringe. If payments are not made on a per hour basis, calculate the hourly fringe credit by dividing the yearly employer contribution by the lesser of: hours actually worked in the year (these must be documented) or 2080. Fringe benefits include: Employer's share of health insurance, life insurance, retirement plan, bonus/profit sharing, sick pay, holiday pay, personal leave, vacation, and education/training programs.
- 8. Total Hours All Jobs: Total all hours worked during the pay period including non-prevailing wage jobs.
- 9. Total Gross All Jobs: Gross amount earned in the pay period for all hours worked.
- 10. Self explanatory.
- 11. Self explanatory.
- 12. Self explanatory.

CONTACT US

Division of Industrial Compliance & Labor
6606 Tussing Road
Reynoldsburg, OH 43068

Phone 614.644.2223
Fax 614.644.2618
Email IC@com.state.oh.us

Webmaster
Contact the Webmaster for Questions or Comments on the Website:
webmaster@com.state.oh.us

CONNECT WITH US

LOOKUP SERVICES

Registered Contractor List
Boiler Information Database
Building Code Compliance Electronic Plan Submission
Board Of Building Appeals Case Lookup
Elevator Database Lookup

RESOURCES

Federal Wage and Hour
U.S. Consumer Product Safety Commission
National Electric, Fire Alarm and Sprinkler Codes
Minor Labor Law Poster
2017 Minimum Wage Poster
2018 Minimum Wage Poster

ABOUT INDUSTRIAL COMPLIANCE

Director Sheryl Maxfield
Interim Superintendent Geoff Eaton

Ohio.gov

Copyright©2012 Ohio Department of Commerce. All Rights Reserved.

Ohio | Department of Commerce

Division of Industrial Compliance

John R. Kasich, Governor
Jacqueline T. Williams, Director

Bureau of Wage and Hour Administration
6606 Tussing Road - PO Box 4009
Reynoldsburg, OH 43608-9009
Phone 614-644-2239 | Fax 614-728-8639
TTY/TDD 800-750-0750
com.ohio.gov
An Equal Opportunity Employer and Service Provider

PREVAILING WAGE CONTRACTOR RESPONSIBILITIES

This is a summary of prevailing wage contractors' responsibilities. For more detailed information please refer to Chapter 4115 of the Ohio Revised Code

General Information

Ohio's prevailing wage laws apply to all public improvements financed in whole or in part by public funds when the total overall project cost is fairly estimated to be more than $250,000 for new construction or $75,000 for reconstruction, enlargement, alteration, repair, remodeling, renovation, or painting.

Ohio's prevailing wage laws apply to all public improvements financed in whole or in part by public funds when the total overall project cost is fairly estimated to be more than $91,150 for new construction that involves roads, streets, alleys, sewers, ditches and other works connected to road or bridge construction or $27,309 for reconstruction, enlargement, alteration, repair, remodeling, renovation, or painting of a public improvement that involves roads, streets, alleys, sewers, ditches and other works connected to road or bridge construction.

a) Thresholds are to be adjusted biennially by the Administrator of Ohio Department of Commerce, Division of Industrial Compliance and Labor, Bureau of Wage and Hour Administration

b) Biennial adjustments to threshold levels are made according to the Price Deflator for Construction Index, United States Department of Commerce, Bureau of the Census*, but may not increase or decrease more than 3% for any year

Penalties for violation

Violators are to be assessed the wages owed, plus a penalty of 100% of the wages owed.

Intentional Violations

If an intentional violation is determined to have occurred, the contractor is prohibited from contracting directly or indirectly with any public authority for the construction of a public improvement. Intentional violation means "a willful, knowing, or deliberate disregard for any provision" of the prevailing wage law and includes but is not limited to the following actions:

- Intentional failure to submit payroll reports as required, or knowingly submitting false or erroneous reports.
- Intentional misclassification of employees for the purpose of reducing wages.
- Intentional misclassification of employees as independent contractors or as apprentices.
- Intentional failure to pay the prevailing wage.
- Intentional failure to comply with the allowable ratio of apprentices to skilled workers as required by the regulations established by Ohio Department of Commerce, Division of Industrial Compliance and Labor, Bureau of Wage and Hour Administration.
- Intentionally employing an officer, of a contractor or subcontractor, that is known to be prohibited from contracting, directly or indirectly, with a public authority.

Responsibilities

A. Pay the prevailing rate of wages as shown in the wage rate schedules issued by the Ohio Department of Commerce, Division of Industrial Compliance and Labor, Bureau of Wage and Hour Administration, for the classification of work being performed.

1. Wage rate schedules include all modifications, corrections, escalations, or reductions to wage rates issued for the project.

2. Overtime must be paid at time and one-half the employee's base hourly rate. Fringe benefits are paid at straight time rate for all hours including overtime.
3. Prevailing wages must be paid in full without any deduction for food, lodging, transportation, use of tools, etc.; unless, the employee has voluntarily consented to these deductions in writing. The public authority and the Director of Ohio Department of Commerce, Division of Industrial Compliance and Labor, Bureau of Wage and Hour Administration - must approve these deductions as fair and reasonable. Consent and approval must be obtained before starting the project.

B. Use of Apprentices and Helpers cannot exceed the ratios permitted in the wage rate schedules.
1. Apprentices must be registered with the U.S. Department of Labor Bureau of Apprenticeship and Training.
2. Contractors must provide the Prevailing Wage Coordinator a copy of the Apprenticeship Agreement for each apprentice on the project.

C. Keep full and accurate payroll records available for inspection by any authorized representative of the Ohio Department of Commerce, Division of Industrial Compliance, and Labor, Bureau of Wage and Hour Administration or the contracting public authority, including the Prevailing Wage Coordinator. Records should include but are not limited to:
1. Time cards, time sheets, daily work records, etc.
2. Payroll ledger\journals and canceled checks\check register.
3. Fringe benefit records must include program, address, account number, & canceled checks.
4. Records made in connection with the public improvement must not be removed from the State for one year following the completion of the project.
5. Out-of-State Corporations must submit to the Ohio Secretary of State the full name and address of their Statutory Agent in Ohio.

D. Prevailing Wage Rate Schedule must be posted on the job site where it is accessible to all employees.

E. Prior to submitting the initial payroll report, supply the Prevailing Wage Coordinator with your project dates to schedule reporting of your payrolls.

F. Supply the Prevailing Wage Coordinator a list of all subcontractors including the name, address, and telephone number for each.
1. **Contractors are responsible for their subcontractors' compliance with requirements of Chapter 4115 of the Ohio Revised Code.**

G. Before employees start work on the project, supply them with written notification of their job classification, prevailing wage rate, fringe benefit amounts, and the name of the Prevailing Wage Coordinator for the project. A copy of the completed signed notification should be submitted to Prevailing Wage Coordinator.

H. Supply all subcontractors with the Prevailing Wage Rates and changes.

I. Submit certified payrolls within two (2) weeks after the initial pay period. Payrolls must include the following information:
1. Employees' names, addresses, and social security numbers.
   (a) Corporate officers/owners/partners and any salaried personnel who do physical work on the project are considered employees. All rate and reporting requirements are applicable to these individuals.
2. Employees' work classification.
   (a) Be specific about the laborers and/or operators (Group)
   (b) For all apprentices, show level/year and percent of journeyman's rate
3. Hours worked on the project for each employee.

(a) The number of hours worked in each day and the total number of hours worked each week.

4. Hourly rate for each employee.
   (a) The minimum rate paid must be the wage rate for the appropriate classification. The Department's Wage Rate Schedule sets this rate.
   (b) All overtime worked is to be paid at time and one-half for all hours worked more than forty (40) per week.
5. Where fringes are paid into a bona fide plan instead of cash, list each benefit and amount per hour paid to program for each employee.
   (a) When the amount contributed to the fringe benefit plan and the total number of hours worked by the employee on all projects for the year are documented, the hourly amount is calculated by dividing the total contribution of the employer by the total number of hours worked by the employee.
   (b) When the amount contributed to the fringe benefit is documented but not the total hours worked, the hourly amount is calculated by **dividing the total yearly contribution by 2080**.
6. Gross amount earned on all projects during the pay period.
7. Total deductions from employee's wages.
8. Net amount paid.

J. The reports shall be certified by the contractor, subcontractor, or duly appointed agent stating that the payroll is correct and complete; and that the wage rates shown are not less than those required by the O.R.C. 4115.

K. Provide a Final Affidavit to the Prevailing Wage Coordinator upon the completion of the project.

PREVAILING WAGE THRESHOLD LEVELS
IMPORTANT NOTICE

Before advertising for bids, contracting, or undertaking construction with its own forces, to construct a public improvement, the Public Authority shall have the Ohio Department of Commerce-Division of Industrial Compliance, Bureau of Wage and Hour Administration determine the prevailing rates of wages for workers employed on the public improvement. The wage determination must be included in the project specifications and printed on the bidding blanks where work is done by contract.

"New" construction threshold for *Building* Construction:	**$250,000**

"Reconstruction, enlargement, alteration, repair, remodeling, renovation, or painting" threshold level for *Building* Construction:	**$75,000**

As of January 1, 2018:

"New" construction that involves *roads, streets, alleys, sewers, ditches and other works connected to road or bridge construction* threshold level has been adjusted to:	**$91,150**

"Reconstruction, enlargement, alteration, repair, remodeling, renovation, or painting" that involves *roads, streets, alleys, sewers, ditches and other works connected to road or bridge construction* threshold level has been adjusted to:	**$27,309**

A) Thresholds are to be adjusted biennially by the Director of the Ohio Department of Commerce.
B) Biennial adjustments to threshold levels are made according to the Building Cost for Skilled Labor Index published by McGraw-Hill's Engineering News-Record, but may not increase or decrease more than 3% for any year.

If there are questions concerning this notification, please contact:

Ohio Department of Commerce
Division of Industrial Compliance
Bureau of Wage and Hour Administration
6606 Tussing Road, PO Box 4009
Reynoldsburg, Ohio 43068-9009
Phone: 614-644-2239
Fax: 614-728-8639
www.com.ohio.gov

Department of Commerce

Division of Industrial Compliance
John R. Kasich, Governor
Jacqueline T. Williams, Director

Instructions for Filing a Minimum Wage Complaint

There is no cost in having a valid complaint investigated by our office. Please be advised, we cannot provide legal advice or act as your attorney. Also, please note, this office is only able to pursue minimum wage for the hours that are found to be unpaid. You also have the option of pursing your complaint privately or you may wish to contact an attorney. However, you cannot pursue your complaint through both processes at the same time.

After reviewing the guidelines below, if you believe that your situation falls within our investigatory limitations, you may file a complaint with our office.

The Bureau of Wage and Hour Administration investigates complaints involving the following:

- Minimum wage not being paid,
- Overtime not being paid,
- Unauthorized deductions, and
- Last paychecks being held.

We cannot collect wages owed for the any of the following reasons:

- Vacation pay,
- Sick leave,
- Holidays, or
- Other employment benefits promised to you.

In addition, we cannot investigate a complaint if you believe you were improperly terminated or if your employer did not properly withhold taxes, social security, etc.

In order to file a complaint, please follow these steps:

1. Fill in the form completely using black or blue ink. Please print legibly.

2. Provide copies, NOT originals, of the following; pay stubs, time sheets and any other records that will help prove your claim.

3. Use a separate sheet of paper to explain your situation, if needed.

4. Please have your signature notarized.

5. If you wish to remain anonymous, please indicate that by selecting the correct boxes on the form. Please note, you will remain anonymous until such time that wages are to be paid.

6. Submit the completed complaint form and your records to:

   Division of Industrial Compliance
   Bureau of Wage and Hour Administration,
   6606 Tussing Road
   Reynoldsburg, OH 43068

Please note, a complaint will be rejected if it does not contain complete and sufficient information. A compliant may also be rejected depending on your employment status (i.e. an exempt employee).

Department of Commerce

Division of Industrial Compliance

John R. Kasich, Governor
Jacqueline T. Williams, Director

MINIMUM WAGE COMPLAINT

Current Status With this Employer:	**DO NOT WRITE IN THIS AREA**	
Present employee of business? ☐Yes ☐No	Case #_____	
Former employee of business? ☐Yes ☐No	Approved ☐Yes ☐No	
Reason for filing complaint:	Rejected ☐Yes ☐No	
☐Minimum wage not paid ☐ Overtime not paid	Denied ☐Yes ☐No	
☐ Unpaid wages ☐ Last pay not received	County	Investigator
☐ Other (Explain in comments section below)	Comments:	

INCOMPLETE FORMS WILL BE RETURNED

EMPLOYER INFORMATION	Name			
Telephone	Address			
Email/Website	City	State	Zip	County
Type of Business	Number of Employees ☐ 0-5 ☐ 10 - 25 ☐ 50 - 75 ☐ 100 Plus			
Owner's name	Supervisor's name and title			
Is the business still operating? ☐Yes ☐No Business is _____ Over / _____ Under $500,000. per year	Has the business filed bankruptcy? ☐Yes ☐No			
COMPLAINANT/EMPLOYEE INFORMATION Employees should include copies of pay stubs, time cards, or any other documents that will assist in our investigation	Name			
Telephone	Address			
Other telephone numbers where you can be reached:	City	State	Zip	County
Email	☐ Yes, I authorize the use of my name ☐ No, I do not authorize the use of my name			

Are you over 18 years old? ☐Yes ☐No	How long did you work there? _____ From ___/___/___ To ___/___/___	What position did you hold?

WAGE PAYMENTS		**Are any part of these wages for?**	
☐Hourly? Amount_____	☐Weekly?	Bonus	☐Yes ☐No
☐Salary? Amount_____	☐Bi-weekly?	Commission	☐Yes ☐No
☐Overtime? Amount_____	☐Monthly?	Vacation/Holiday Pay/Sick Leave	☐Yes ☐No
Were tips received?	☐Yes ☐No	Do you owe your employer for advances, loans, merchandise, etc.	☐Yes ☐No
If yes, was at least $30 in tips reported each week?	☐Yes ☐No	If yes, amount owed:	$_____
Were you employed:			
In outside sales?	☐Yes ☐No	Did employer keep time records?	☐Yes ☐No
In a managerial/supervisory position?	☐Yes ☐No	Were you paid in cash?	☐Yes ☐No
By a governmental agency?	☐Yes ☐No	Did employer keep wage records?	☐Yes ☐No
In a professional position?	☐Yes ☐No	Do you have your own record of hours worked?	☐Yes ☐No
In interstate commerce?	☐Yes ☐No		
HOW MUCH ARE YOU OWED? $_____			
TIME PERIOD From _____/_____/_____ To _____/_____/_____			

NUMBER OF HOURS WAGES CLAIMED FOR _____	Were deductions for taxes, etc. withheld? ☐Yes ☐No If yes, were amounts listed on pay stubs? ☐Yes ☐No

ADDITIONAL COMMENTS:

_____

_____

_____

_____

_____

Please Attach Additional Sheets If Necessary

ATTACH ANY INFORMATION TO SUBSTANTIATE YOUR CLAIM. UNSUBSTANTIATED CLAIMS MAY BE RETURNED.

SPECIAL NOTICE

I _____, on this day _____

☐ **Do**

☐ **Do Not**

Assign to the Ohio Department of Commerce all rights, title, and interest to my claim for wages against _____.
(Employer)

In assigning these rights, I am aware that I must submit written notice of any change in my representational status.

☐ Yes, I authorize the use of my name

☐ No, I do not authorize the use of my name

Signature date

SIGNATURE & NOTARY

Complaints will be returned if not complete & signed

Affiant is further informed that Section 2921.13 of the Ohio Revised Code provides a penalty of a misdemeanor of the first degree and that prosecution will be pursued of those persons who "knowingly swear or affirm the truth of a false statement when… the statement is sworn or affirmed before a notary public…"

Sworn to before me and subscribed by the said:

In my presence this _____day of _____20____

_____Notary Public

I hereby certify that this is a true statement to the best of my knowledge and belief.

Signature date

Return to:

Ohio Department of Commerce
Division of Industrial Compliance
Bureau of Wage & Hour Administration
6606 Tussing Road, P.O. Box 4009
Reynoldsburg, OH 43068 - 9009
614-644-2239 Fax 614-644-8639

(Revised 9/30/11)

An Equal Opportunity Employer and Service Provider

*** INCOMPLETE FORMS WILL BE RETURNED ***

STATE OF OHIO
REQUEST FOR PREVAILING WAGE RATES

Important: If you wish to retain a copy of this form for your records, please print it prior to clicking on the "Submit" button. When you click the "Submit" button, a prompt should appear which will allow you to obtain the necessary wage rates by clicking on the "view wage rates" button. Submitting this form notifies the Bureau of Labor and Worker Safety of your project. Wage rates will not be sent to you by mail as a result of the submission, rather you should obtain them by clicking on the "view wage rates" button.

Public Authority Information

Owner/Public Authority Name:	Brunswick Hills Township	**Date: 02/20/2019** This form must be filled out completely & correctly for us to process your request. Forms not completed correctly will be returned to the sender.
Department Division or Agency:	Service Department	
Street Address:	1918 Pearl Road	
Address 2:		ODOC Date Stamp
City, OH	Brunswick, Ohio	
ZIP:	44212	
Email:	pmagovac@brunswickhil It is required that you list your e-mail address here.	
County of Public Authority:	MEDINA	
P.A. Phone:	3302204784	

Project Information

Project Name:	2018 Road Resurfacing	ODOC Date Stamp (Bld Tab)
Site Address:	Various roads throughtout the township	
City, OH	Brunswick Hills, Ohio	
ZIP:	44212	
County of Project:	MEDINA	
Prevailing Wage Coordinator Name	Kathrine Esber	
Address:	1918 Pearl Road	
City,	Brunswick, Ohio	
ZIP:	44212	
Phone:	330 225 2211	
Issuing Authority of Bonds:		

Estimated Total Overall Project Cost:	$135,000.00	
Type of Financing:	Check	
Type of Construction:	○ New Construction ○ Old Construction	
This Project is	○ Residential ○ Commercial	
Expected Date of Contract Award:	4/15/19 **example 05/31/98**	
Projected Completion Date:	10/1/19 **example 05/31/98**	
Project Comments:	(optional)	

Important: If you wish to retain a copy of this form for your records, please print it prior to clicking on the "Submit" button. When you click the "Submit" button, a prompt should appear which will allow you to obtain the necessary wage rates by clicking on the "view wage rates" button. Submitting this form notifies the Bureau of Labor and Worker Safety of your project. Wage rates will not be sent to you by mail as a result of the submission, rather you should obtain them by clicking on the "view wage rates" button.

Submit

Please contact our Webmaster with questions or comments.

LAW 1002

Prevailing Wage Rate
Skilled Crafts

Name of Union: Asbestos Local 207 OH

Change # : LCN01-2018fbLoc207OH

Craft : Asbestos Worker Effective Date : 08/23/2018 Last Posted : 08/23/2018

	BHR	Fringe Benefit Payments						Irrevocable Fund		Total PWR	Overtime Rate
		H&W	Pension	App Tr.	Vac.	Annuity	Other	LECET (*)	MISC (*)		
Classification											
Asbestos Abatement	$25.50	$7.25	$6.45	$0.65	$0.00	$0.00	$0.07	$0.00	$0.00	$39.92	$52.67
Trainee	$16.50	$7.25	$1.50	$0.65	$0.00	$0.00	$0.07	$0.00	$0.00	$25.97	$34.22

Special Calculation Note :

Ratio :

3 Journeymen to 1 Trainee

Jurisdiction (* denotes special jurisdictional note) :

ADAMS, ASHLAND, ASHTABULA*, ATHENS, AUGLAIZE, BROWN, BUTLER*, CARROLL, CHAMPAIGN, CLARK, CLERMONT, CLINTON, COLUMBIANA, COSHOCTON, CRAWFORD, CUYAHOGA, DARKE, DELAWARE, FAIRFIELD, FAYETTE, FRANKLIN, GEAUGA, GREENE, GUERNSEY, HAMILTON, HARDIN, HARRISON, HIGHLAND, HOCKING, HOLMES, HURON, KNOX, LAKE, LICKING, LOGAN, LORAIN, MADISON, MAHONING, MARION, MEDINA, MIAMI, MONTGOMERY, MORGAN, MORROW, MUSKINGUM, NOBLE, PERRY, PICKAWAY, PORTAGE, PREBLE, RICHLAND, ROSS, SHELBY, STARK, SUMMIT, TRUMBULL, TUSCARAWAS, UNION, VINTON, WARREN*, WAYNE

Special Jurisdictional Note : Butler County:(townships of Fairfield,Hanover,Liberty,Milford,Morgan,Oxford,Ripley,Ross,StClair,Union & Wayne.) (Lemon & Madison) Warren County: (townships of: Deerfield, Hamilton, Harlan, Salem, Union & Washington). (Clear Creek, Franklin, Mossie, Turtle Creek & Wayney). Ashtabula County: (post offices & townships of Ashtabula, Austinburg, Geneva, Harperfield, Jefferson, Plymouth & Saybrook) (townships of Andover, Cherry Valley, Colbrook, Canneaut, Denmark, Dorset, East Orwell, Hartsgrove, Kingville, Lenox, Monroe,Morgan,New

CITY OF BRUNSWICK, OHIO
RESOLUTION NO. 46-19

BY: Mrs. Rodriguez, Mr. Capretta, and Mr. Hanek

A RESOLUTION AUTHORIZING DIRECT PAYMENT TO MELWAY PAVING COMPANY, INC. FOR THE CITY'S PROPORTIONATE SHARE OF THE LAUREL ROAD AND SOUTH CARPENTER ROAD RESURFACING PROJECT.

WHEREAS: On December 10, 2018, City Council adopted Resolution No. 102-18 pledging cooperation with the Medina County Engineer and Brunswick Hills Township for the resurfacing of Laurel Road and South Carpenter Road (the "Project") in an amount not to exceed $120,000.00 for the portion of the Project located in the City;

WHEREAS: The Medina County Engineer prepared the bid package, bid the Project, opened the five (5) received public bids and prepared the bid tabulation;

WHEREAS: Upon review of the bid tabulation, Brunswick Hills Township awarded the Contract for the Project to Melway Paving Company, Inc. as the lowest and best bidder; and

WHEREAS: Brunswick Hills Township has requested that the City pay the City's proportionate share of the Project directly to Melway Paving Company, Inc.

WHEREAS: THE COUNCIL OF THE CITY OF BRUNSWICK HEREBY RESOLVES:

SECTION 1: That direct payment to Melway Paving Company, Inc. for the City's proportionate share of the Project is hereby authorized, in an amount not to exceed $120,000.00, upon final inspection approval of the Project and certification of the City's proportionate share.

SECTION 2: That this Resolution shall take effect and be in force from and after the earliest period allowed by law.

PASSED: 1st Reading_____

2nd Reading_____

3rd Reading_____

ADOPTED: _____ AYES _____ NAYS _____

ATTEST: _____
Clerk of Council
Fijabi Julien-Gallam, CMC

CITY OF BRUNSWICK, OHIO
RESOLUTION NO. _____

BY:

A RESOLUTION AUTHORIZING DIRECT PAYMENT TO MELWAY PAVING COMPANY, INC. FOR THE CITY'S PROPORTIONATE SHARE OF THE LAUREL ROAD AND SOUTH CARPENTER ROAD RESURFACING PROJECT.

WHEREAS: On December 10, 2018, City Council adopted Resolution No. 102-18 pledging cooperation with the Medina County Engineer and Brunswick Hills Township for the resurfacing of Laurel Road and South Carpenter Road (the "Project") in an amount not to exceed $120,000.00 for the portion of the Project located in the City;

WHEREAS: The Medina County Engineer prepared the bid package, bid the Project, opened the five (5) received public bids and prepared the bid tabulation;

WHEREAS: Upon review of the bid tabulation, Brunswick Hills Township awarded the Contract for the Project to Melway Paving Company, Inc. as the lowest and best bidder; and

WHEREAS: Brunswick Hills Township has requested that the City pay the City's proportionate share of the Project directly to Melway Paving Company, Inc.

WHEREAS: THE COUNCIL OF THE CITY OF BRUNSWICK HEREBY RESOLVES:

SECTION 1: That direct payment to Melway Paving Company, Inc. for the City's proportionate share of the Project is hereby authorized, in an amount not to exceed $120,000.00, upon final inspection approval of the Project and certification of the City's proportionate share.

SECTION 2: That this Resolution shall take effect and be in force from and after the earliest period allowed by law.

PASSED: 1st Reading_____

2nd Reading_____

3rd Reading_____

ADOPTED: _____ AYES _____ NAYS _____

ATTEST: _____
Clerk of Council
Fijabi Julien-Gallam, CMC