BRUNSWICK CITY COUNCIL AGENDA

Brian Ousley At-Large	Nicholas Hanek Ward 2	Patricia Hanek At-Large	Kenneth Fisher Law Director	Carl S. DeForest City Manager	Ron Falconi Mayor	Fijabi Julien-Gallam Council Clerk	Michael Abella Jr. Ward 1	Andrea Rodriguez Ward 3	Joseph Delsanter At-Large	Anthony Capretta Ward 4

Administration Representatives

JULY 8, 2019
7:30 PM
IN COUNCIL CHAMBERS

1. Prayer and Pledge of Allegiance

2. Roll Call of Members

3. Correspondence

4. Approval of Minutes

   (a) Regular Council Meeting Minutes dated June 24, 2019

5. Mayor's Report:

   (a) Proclamation for Nancy Abbott for Community Service;

   (b) Recognition of Val Zak upon her retirement from the City of Brunswick;

   (c) Mayor's Court Financial Report for the month ending June 2019 will be posted on the website and added to the minutes for the record;

   (d) Mayor's Update

6. Clerk of Council's Report

7. Council Committee Reports:

   Economic Development Committee.....Mr. Hanek

   Economic Development Committee Meeting Minutes dated June 18, 2019

   Services, Utilities, Technology & Cable Committee.....Mrs. Rodriguez

   Finance Committee.....Mrs. Hanek

   Finance Committee Meeting Minutes dated June 24, 2019

   Safety & Environment Committee.....Mr. Ousley

   Planning & Zoning Committee.....Mr. Delsanter

   Planning Committee Meeting Minutes dated June 20, 2019

   Parks, Recreation & Community Committee.....Mr. Abella Jr.

   Building & Building Code Committee.....Mr. Capretta

8. Other Boards and Commissions

   (a) Committee of the Whole Meeting Minutes dated June 24, 2019

9. Petitions from the Public on Legislation

10. Reading of Legislation and Action on Legislation:

a. 3rd Reading(s)

ORD. NO. 37-19 - An emergency ordinance amending Chapter 1060 of the City of Brunswick Codified Ordinances. - **3rd Reading** (Committee-of-the-Whole, *Administration/Paul Barnett*)

RES. NO. 38-19 - An emergency resolution authorizing the City Manager to enter into a three (3) year agreement with Zimmerman Paint Contractors, CO. for the provision of pavement marking services. - **3rd Reading** (Services, Utilities, Technology & Cable Committee, *Administration/Paul Barnett*)

b. 2nd Reading(s)

ORD. NO. 39-19 - An emergency ordinance extending a temporary moratorium on the acceptance and processing of applications for zoning, occupancy and/or building permit approvals for warehousing and motor freight garages and truck or transfer terminal uses in the I-L Light Industrial district and the issuance of such approvals. - **2nd Reading** (Committee-of-the-Whole, *Administration/Nicholas Hanek*)

ORD. NO. 40-19 - An emergency ordinance extending a temporary moratorium on the acceptance and processing of applications for zoning, occupancy, conditional use and/or building permit approvals for multi-family dwelling units in all zoning districts and the issuance of such approvals. - **2nd Reading** (Committee-of-the-Whole, *Administration/Brian Ousley*)

RES. NO. 46-19 - A resolution authorizing direct payment to Melway Paving Company, INC. for the city's proportionate share of the Laurel Road and South Carpenter Road Resurfacing Project. - **2nd Reading** (Services, Utilities, Technology & Cable Committee, *Administration/Paul Barnett*)

c. 1st Reading(s)

ORD, NO. 47-19 - An ordinance approving the Vicky Drive Extension Single Family Cluster Development Preliminary Subdivision Plan subject to any conditions recommended by the Planning Commission and any other conditions imposed by council. - **1st Reading** (To be brought from Planning & Zoning Committee, *Administration/Grant Aungst*)

ORD. NO. 48-19 - An ordinance rezoning the western 12.03 acres of PPN 003-18A-04-193 from the R-R Rural Residential District to the R-L Low Density Residential District.- **1st Reading** (To be brought from Planning & Zoning Committee, *Administration/Grant Aungst*)

RES. NO. 49-19 - A resolution declaring the City of Brunswick a "Purple Heart City." - **1st Reading** (To be brought from Committee-of-the-Whole, *Administration/Nicholas Hanek*)

RES. NO. 50-19 - An emergency resolution authorizing the City Manager to enter into an agreement with Perk Company, INC. for the Laurel Road Reconstruction Phase 2 project in an amount not to exceed $840,357.00. - **1st Reading** (To be brought from Services, Utilities, Technology & Cable Committee, *Administration/Matt Jones*)

11. City Manager's Report

12. Administrative Departments

13. Open Forum

14. Unfinished Business

15. New Business

16. Adjournment

CITY OF BRUNSWICK, OHIO

MINUTES OF COUNCIL

MONDAY, JUNE 24, 2019

Prayer and Pledge of Allegiance: The regular meeting of Brunswick City Council was called to order by Mayor Ron Falconi at 7:30 p.m. at the Municipal Complex.

Roll Call of Members showed the following Council Members present: Nicholas Hanek, Andrea Rodriguez, Michael Abella Jr., Anthony Capretta, Joseph Delsanter, Patricia Hanek and Brian Ousley.

Others Present: Mayor Ron Falconi, Clerk of Council Fijabi Julien-Gallam, City Manager Carl S. DeForest and Law Director Ken Fisher.

Correspondence: There was none.

Approval of Minutes:

Nicholas Hanek moved to approve regular Council Meeting Minutes dated June 10, 2019, as written, seconded by Anthony Capretta. Roll Call - Ayes - 6, Patricia Hanek, Joseph Delsanter, Brian Ousley, Nicholas Hanek, Anthony Capretta, Andrea Rodriguez. Nays - 0. Motion Carried.

Mayor's Report:

Mayor Ron Falconi remarked that he was able to attend the Brunswick Summer Celebration and the St. Ambrose Summer festival over the weekend.

Clerk of Council's Report:

Clerk of Council Fijabi Julien-Gallam remarked that Cleveland Water is offering two discount programs (Cleveland Water's Homestead Program and the Water Affordability Program) to provide residents who qualify for the option to receive discounted rates on their water bill. Residents could get more information, or to apply for the Homestead Program by visiting Clevelandwater.com or calling 216-664-3130. For the Water Affordability Program, the resident would have to visit chnhousingpartners.org or call 216-774-2349.

Council Committee Reports:

Economic Development Committee.....Mr. Hanek:

Mr. Hanek had no formal reports this evening.

Services, Utilities, Technology & Cable Committee.....Mrs. Rodriguez:
Andrea Rodriguez moved to approve the Services, Utilities, Technology, and Cable Committee

formal report dated June 10, 2019, as written, seconded by Anthony Capretta. Roll Call - Ayes - 7, Michael Abella Jr., Patricia Hanek, Brian Ousley, Nicholas Hanek, Andrea Rodriguez, Joseph Delsanter, Anthony Capretta. Nays - 0. Motion Carried.

Finance Committee.....Mrs. Hanek :

Mrs. Hanek had no formal reports this evening.

Safety & Environment Committee.....Mr. Ousley:

Mr. Ousley no formal reports this evening.

Planning & Zoning Committee.....Mr. Delsanter:

Mr. Delsanter had no formal reports this evening.

Parks, Recreation & Community Committee.....Mr. Abella Jr.:

Mr. Abella Jr. had no formal reports this evening.

Building & Building Code Committee.....Mr. Capretta:

Anthony Capretta moved to approve the Building & Building Code Committee formal report dated June 10, 2018, as written, seconded by Joseph Delsanter. Roll Call - Ayes - 7, Anthony Capretta, Nicholas Hanek, Andrea Rodriguez, Joseph Delsanter, Patricia Hanek, Brian Ousley, Michael Abella Jr. Nays - 0. Motion Carried.

Other Boards and Commissions:

Michael Abella Jr. moved to approve the Committee-of-the-Whole minutes dated June 10, 2019, as written, seconded by Patricia Hanek. Roll Call - Ayes - 7, Nicholas Hanek, Andrea Rodriguez, Joseph Delsanter, Patricia Hanek, Michael Abella Jr., Brian Ousley, Anthony Capretta. Nays - 0. Motion Carried.

Petitions from the Public on Legislation: There was none.

Reading of Legislation and Action on Legislation:

3rd Reading(s) - There was none.

2nd Reading(s)

ORD. NO. 37-19 - An emergency ordinance amending Chapter 1060 of the City of Brunswick Codified Ordinances. - **2nd Reading** (Committee-of-the-Whole, *Administration/Paul Barnett*):

ORD. NO. 37-19 - Mr. Abella Jr. moved this ordinance to third reading.

RES. NO. 38-19 - An emergency resolution authorizing the City Manager to enter into a three (3)

year agreement with Zimmerman Paint Contractors, CO. for the provision of pavement marking services. - **2nd Reading** (Services, Utilities, Technology & Cable Committee, *Administration/Paul Barnett*):

RES. NO. 38-19 - Mrs. Rodriguez moved this resolution to third reading.

1st Reading(s)

ORD. NO. 39-19 - An emergency ordinance extending a temporary moratorium on the acceptance and processing of applications for zoning, occupancy and/or building permit approvals for warehousing and motor freight garages and truck or transfer terminal uses in the I-L Light Industrial district and the issuance of such approvals. - **1st Reading** (To be brought from Committee-of-the-Whole, *Administration/Nicholas Hanek*):

ORD. NO. 39-19 - Mr. Abella Jr. moved this ordinance to second reading.

ORD. NO. 40-19 - An emergency ordinance extending a temporary moratorium on the acceptance and processing of applications for zoning, occupancy, conditional use and/or building permit approvals for multi-family dwelling units in all zoning districts and the issuance of such approvals. - **1st Reading** (To be brought from Committee-of-the-Whole, Administration/Brian Ousley):

ORD. NO. 40-19 - Mr. Abella Jr. moved this ordinance to second reading.

RES. NO. 41-19 - An emergency resolution authorizing the City Manager to have entered into a Housing Revolving Loan Fund Administration Agreement with the State of Ohio, Development Services Agency. - **1st Reading** (To be brought from Committee-of-the-Whole, *Administration/Grant Aungst*):

Michael Abella Jr. moved to suspend the rules, seconded by Nicholas Hanek. Roll Call - Ayes - 7, Anthony Capretta, Andrea Rodriguez, Brian Ousley, Joseph Delsanter, Michael Abella Jr., Nicholas Hanek, Patricia Hanek. Nays - 0. Motion Carried.

Finance Director Todd Fisher remarked that the community has a Housing Improvement Program for eligible residents. This resolution is needed to continue this program.

Michael Abella Jr. moved to adopt Resolution Number 41-19, seconded by Joseph Delsanter. Roll Call - Ayes - 7, Anthony Capretta, Andrea Rodriguez, Brian Ousley, Joseph Delsanter, Michael Abella Jr., Nicholas Hanek, Patricia Hanek. Nays - 0. Motion Carried.

ORD. NO. 42-19 - An emergency ordinance to advance funds **- 1st Reading** (To be brought from Finance Committee, *Administration/Todd Fischer*):

Patricia Hanek moved to suspend the rules, seconded by Brian Ousley. Roll Call - Ayes - 7, Anthony Capretta, Andrea Rodriguez, Brian Ousley, Joseph Delsanter, Michael Abella Jr., Nicholas Hanek, Patricia Hanek. Nays - 0. Motion Carried.

Finance Director Todd Fischer remarked that this ordinance would allow the city's administration to move funds to cover the cost of three different grants until the city's administration receives reimbursement from the grantors.

Patricia Hanek moved to adopt Ordinance Number 42-19, seconded by Brian Ousley. Roll Call - Ayes - 7, Anthony Capretta, Andrea Rodriguez, Brian Ousley, Joseph Delsanter, Michael Abella Jr., Nicholas Hanek, Patricia Hanek. Nays - 0. Motion Carried.

ORD. NO. 43-19 - An emergency ordinance authorizing the transfer of the remaining balances in the Special Assessment Grafton Road III Bond Retirement Sub-Fund to the General Obligation Bond Retirement Fund - **1st Reading** (To be brought from Finance Committee, *Administration/Todd Fischer*):

Patricia Hanek moved to suspend the rules, seconded by Brian Ousley. Roll Call - Ayes - 7, Anthony Capretta, Andrea Rodriguez, Brian Ousley, Joseph Delsanter, Michael Abella Jr., Nicholas Hanek, Patricia Hanek. Nays - 0. Motion Carried.

Finance Director Todd Fischer explained that this ordinance is to move approximately $567 to the General Obligation Bond Retirement Fund.

Patricia Hanek moved to adopt Ordinance Number 43-19, seconded by Brian Ousley. Roll Call - Ayes - 7, Anthony Capretta, Andrea Rodriguez, Brian Ousley, Joseph Delsanter, Michael Abella Jr., Nicholas Hanek, Patricia Hanek. Nays - 0. Motion Carried.

ORD. NO. 44-19 - An emergency Ordinance amending Ordinances #89-18 and #20-19 to include amendments to the appropriations budget for the year ending December 31, 2019 as incorporated in Exhibit "A" attached hereto. - **1st Reading** (To be brought from the Finance Committee, *Administration/Todd Fischer*):

Patricia Hanek moved to suspend the rules, seconded by Joseph Delsanter. Roll Call - Ayes - 7, Anthony Capretta, Andrea Rodriguez, Brian Ousley, Joseph Delsanter, Michael Abella Jr., Nicholas Hanek, Patricia Hanek. Nays - 0. Motion Carried.

Finance Director Todd Fischer remarked that exhibit A for this ordinance is the legal document required by the Ohio Revised Code, and exhibit B for this ordinance details out every single budget amendment proposed.

Patricia Hanek moved to adopt Ordinance Number 44-19, seconded by Joseph Delsanter. Roll Call - Ayes - 7, Anthony Capretta, Andrea Rodriguez, Brian Ousley, Joseph Delsanter, Michael Abella Jr., Nicholas Hanek, Patricia Hanek. Nays - 0. Motion Carried.

RES. NO. 45-19 - An emergency resolution ratifying the actions of the City Manager in executing the 2019 Community and Litter Grant agreement with the Ohio Environmental Protection Agency. - **1st Reading** (To be brought from Committee-of-the-Whole, *Administration/Paul Barnett*):

DRAFT

Michael Abella Jr. moved to suspend the rules, seconded by Nicholas Hanek. Roll Call - Ayes - 7, Anthony Capretta, Andrea Rodriguez, Brian Ousley, Joseph Delsanter, Michael Abella Jr., Nicholas Hanek, Patricia Hanek. Nays - 0. Motion Carried.

Service Director Paul Barnett remarked that this resolution is to ratify the signing by the City Manager for the recycle grant in an amount of $200,000. On June 10, 2019, the city's administration received the recycle grant contract from the Ohio Environmental Protection Agency (EPA). This contract is due to Ohio EPA on June 17, 2019. There wasn't a regular City Council Meeting within that time period.

Michael Abella Jr. moved to adopt Resolution Number 45-19, seconded by Patricia Hanek. Roll Call - Ayes - 7, Anthony Capretta, Andrea Rodriguez, Brian Ousley, Joseph Delsanter, Michael Abella Jr., Nicholas Hanek, Patricia Hanek. Nays - 0. Motion Carried.

RES. NO. 46-19 - A resolution authorizing direct payment to Melway Paving Company, INC. for the city's proportionate share of the Laurel Road and South Carpenter Road Resurfacing Project. - **1st Reading** (To be brought from Services, Utilities, Technology & Cable Committee, *Administration/Paul Barnett*):

RES. NO. 46-19 - Mrs. Rodriguez moved this resolution to second reading.

City Manager's Report:

<u>City Manager Carl DeForest</u>

- Reminded everyone that July 4, 2019, is Independence Day and City Hall is not open on this day. During the holiday week, refuse pick-up is one day late for Thursday and Friday pick-up.
- Reminded everyone that solicitors have to have a permit to solicit door to door in the City of Brunswick. The solicitor has to provide the resident with a copy of their permit if the resident requests to see a permit. Mr. DeForest remarked that there are "NO SOLICITING" signs available at City Hall for residents to post on their property.
- Noted that the Brunswick Food Pantry is still accepting food at City Hall during business hours.

Administrative Departments:

<u>Finance Director Todd Fischer</u>

- Remarked that the Auditors had their Post Audit meeting to report the results of the city's financial audit. Mr. Fischer expressed that he was surprised that the auditors did not have any comments to put in their report. He thanked all of the hard workers of the City of Brunswick and everyone that was in involved in the auditing process.

DRAFT

Service Director Paul Barnett

- Remarked that on June 24, 2019, the Medina County Solid Waste Authority is now accepting appliances with Freon at the Seville location. It is $10 for each appliance to drop off at the Seville location.
- Remarked that North Carpenter Road is currently under construction. Mr. Barnett advised everyone to avoid traveling on North Carpenter Road. The project is right on schedule.
- Announced that cart delivery has started for the waste and recycling collection program in Brunswick. Each resident is getting a 96-gallon trash cart, and a 96-gallon recycle cart. He anticipated taking about three weeks to get all carts out to the residents. There is an information packet attached to the trash cans for residents to learn about the new program, and more information is available on the city's website.

Parks and Recreation Director John Piepsny

- Remarked that Logan Wells is playing with Blue Midnight at the Brunswick Recreation Center stage from 6:00 p.m. to 8:00 p.m., on Sunday, June 30, 2019.
- Added that the tennis court at Neura Park is scheduled to be under construction starting on Wednesday, July 3, 2019. This project should last for one week.
- Remarked that the Community Band is playing all the patriotic favorites at the Brunswick Recreation Center stage from 6:30 to 8:30 p.m. followed by the City of Brunswick's fireworks on Wednesday, July 3, 2019, at approximately 10:00 p.m. The rain date for the fireworks is Friday, July 5, 2019.

Open Forum:

Brunswick Lake Park Dinosaur Trail

Glen Kuban, at 4726 Grayton Road, Cleveland, expressed that he spoke at the Regular City Council meeting on June 10, 2019, about keeping the Dinosaur Trail at the Brunswick Lake Park. He covered many positive attributes of the trail. Mr. Kuban reiterated that the trail being a hazard could be addressed by doing low-cost maintenance. He explained that it is not wise to move the trail to another park because it is expensive and it is a lot of work. Mr. Kuban asked residents in the city for their opinions on the trail, and most do not have a strong desire to take out the trail. Mr. Kuban advised the officials to go to the Brunswick Lake Park, and ask the people visiting the park for their opinions on the trail. Mr. Kuban concluded that there is no compelling reason to move the tracks, and there are many good reasons to leave the trail at the park. The trail should be advertised more to the public instead of being removed. He added that he received over 90 signatures to petition the decision to remove the trail.

Sherry McKenzie expressed that she would like to offer her support for the dinosaur tracks in the park. Ms. McKenzie has had many chances to enjoy the trail at the park. She explained that her cousins her fascinated with the dinosaur trail. When Ms. McKenzie visits the trail, she is also spending money in the community as well by going out to eat or going grocery shopping. She hoped

that the elected officials and administration would think twice before removing the dinosaur trail.

Unfinished Business:

Councilman Joseph Delsanter remarked that he visited the Dinosaur Trail at the Brunswick Lake Park. He is aware that there might be a trip hazard at the trail. He noticed that there are things that are going to leave the park that the Medina County Park District and Brunswick Lake Ad Hoc Committee suggested. The Dinosaur Trail and the Nature Center seem to be one of the few educational pieces in the park. The trail is not in the middle of the park. Mr. Delsanter expressed that he did not see the trail being worthy of being torn out, and maybe a path is needed to go along the trail to keep the trail safer. He explained that this trail is a big deal for the children in the community. Mr. Delsanter expressed that he would like to keep the trail in the Brunswick Lake Park.

New Business: There was none.

Adjournment:

Michael Abella Jr. moved to adjourn, seconded by Nicholas Hanek. Roll Call - Ayes - 7, Anthony Capretta, Andrea Rodriguez, Brian Ousley, Joseph Delsanter, Michael Abella Jr., Nicholas Hanek, Patricia Hanek. Nays - 0. Motion Carried.

There being no further business, the meeting adjourned at 7:58 p.m.

Respectfully submitted,

Fijabi Julien-Gallam, CMC

Clerk of Council

_____

Mayor Ron Falconi

_____

Adopted

DRAFT

July 1, 2019

TO: CITY COUNCIL
FROM: CLERK OF COURTS
RE: MONTHLY REPORT TO COUNCIL PER O.R.C.
FOR THE MONTH OF JUNE 2019

WAIVERS/COURT/BONDS

DEPOSITS (June) 40,165.43
DEBITS (June) (40,155.43)

Checks to be written in June:

Treasurer State of Ohio	$ 7,341.50
City of Medina MIATF	$ 100.00
City of Medina IDATF	$ 202.50
City of Brunswick Finance Dept/Police Fund *	$30,245.15
Misc Checks (bond refunds & transfers/restitution)	$ 2,266.28
TOTAL for the month	$40,155.43

*Check includes amounts to: Court Computer Fund and Education & Enforcement Fund

Service Charges/Fees for prior month $368.07

MAYOR RONALD FALCONI

TERESA BENO, CLERK OF COURTS

ECONOMIC DEVELOPMENT

June 18, 2019

IN ATTENDANCE: Chairman Nicholas Hanek, Committee Member Patricia Hanek, Committee Member Brian Ousley, Community & Economic Development Director Grant Aungst, John Rocha.

The meeting convened at 5:51 p.m.

GENERAL DISCUSSION:

Mr. Aungst commented on how national and international affairs effect local governments and local economies; as of now the Mexican tariffs have been averted; however Mr. Aungst expressed if the tariffs had occurred; it would have had an effect on our local businesses and local economy due to it being so heavily automotive. Mr. Aungst urged the committee to contact their local representatives.

Mr. Aungst announced two developments being presented at the next Planning Commission Meeting; the extension of Vicky Drive which will result in a beautiful development of twelve to fifteen very attractive new homes with a price point starting between $425,000 and $450,000 dollars. He commented how the development will be an asset to the community and how new developments help clean up water issues. He explained new developments that fit the code improve water issues in the older developments, he noted blank land without being developed or funneled can potentially create more of an issue than not. The other development being presented to Planning Commission is a potential 159,000 square foot Meijer grocery/retail store along with a convenience store and gas station. Mr. Aungst commented how it potentially will be a tremendous asset for the community.

If the Meijer development happens, Mr. Ousley asked about DaVita Dialysis and the other property on the corner of Maxwell if they were staying, and Mr. Aungst interjected both buildings would stay. Mrs. Hanek pointed out according to the map both those properties looked to stay. Mr. Aungst interjected DaVita Dialysis was staying where it was, and the other building Mr. Ousley pointed out was an empty building; Mrs. Hanek interjected the empty building was due to the change in lending laws that

Mr. Hanek asked about the Cleveland Clinic medical building in that area and Mr. Aungst noted Cleveland Clinic planned on moving to a space on RT 18.

Five Star Gymnastics continues progressing, Chick-fil-A was looking to continue their detailed discussion plans at the next available Planning Commission meeting. Mr. Aungst spoke with the owners of Town Center development with regard to Steak-N-Shake, and he was informed that Steak-N-Shake corporate offices were not being cooperative. The Brunswick Middle School is on schedule with their build, KFC was moving along, AMG Freightliner received a one year

variance from BZA to rezone a three acre parcel which the City was in favor of, and they will be putting in a new facility next to Select Truck. West Branch Malts was working on expanding and will be presenting to Planning Commission in the near future, Taco Bell on Laurel/Pearl broke ground for grading, Geek Out was coming along, and Mr. Aungst noted a retail store selling running shoe was opening in Town Center, and he also mentioned Town Center was booked out. ID Images continues with their remodel and KHM travel continues to grow their business and will be moving to a new location in the Highland Square plaza.

Mr. Aungst mentioned Secretary of State Frank LaRose recently visited in Medina County; he spoke on the economic growth of the state, Senator Sherrod Brown met with administration in Brunswick; he was complimentary to the community and interested in the business community, and Congressman Anthony Gonzalez was also in Brunswick and met with a few businesses in the Industrial Park.

As a reminder Made in Medina County Expo is scheduled for Friday, October 4, many manufacturers and industries will be present to educate students and the public as to what is made in Medina County. Mr. Aungst mentioned the administration continues working on new postings in social media, and Mr. Aungst is currently working with a potential large manufacturing operation.

Mr. Aungst distributed a copy of the quarterly economic review from Team NEO, regarding food and beverage manufacturing in Northeast Ohio. Mr. Aungst noted the City has a number of food manufactures or related manufactures tied to the review. Mr. Aungst noted the City was seeing growth in this area, West Branch Malt is a food processor; and there are other small food and beverage manufactures in the City.

Mr. Aungst saw that Mr. Hanek brought forward legislation to extend the warehouse and truck transfer moratorium; the moratorium helps the City define the use of the industrial district more greatly and focus on job growth as opposed to having empty warehouses.

Mr. Hanek noted the current moratorium will be extended six months.

Mr. Hanek asked about the Comprehensive Plan; without having the plan in place the moratorium had to be extended.

Mr. Aungst noted everyone has been working on finishing up the details of the Comprehensive Plan making sure everything is in place before it goes to print.

Without going into details Mr. Hanek would think there is some thought going into the Comprehensive Plan for that area; and Mr. Aungst stated there was.

The recommendation of Mr. Aungst to the City Manager is once the administration is satisfied with the text of the comprehensive plan to move in parallel terms between economic

development committee and planning committee in a draft form so that the comprehensive plan can be reviewed, and that is a different path than what was previously done.

Mrs. Hanek asked if Mr. Aungst feels the City will be going in the same direction with medical and educational like has been done the last decade.

To that, Mr. Aungst noted the plan is an update as opposed to a deep dive, and it was important for Council, the economic development committee and planning committee to look at what the best use of property is, with the goal being to create long term high quality jobs.

Mrs. Hanek commented medical and education has been the traditional viewpoint for the last decade, however the residents continue to ask for restaurants.

The committee discussed manufacturing industry related businesses; Mr. Aungst noted when those types of businesses become closer to capacity as they currently are, more commercial developments will come which is what the City is starting to see in multiple parts of the community. The committee discussed per capita household incomes which have gone up, home prices have increased, as well as new housing starts and these are things retailers look at.

The committee commented how things were going well in the City right now and Mrs. Hanek was looking forward to everything coming to fruition. Mr. Hanek noted once the comprehensive plan is completed and the codified ordinances are reviewed and updated things will become clearer.

Mr. Ousley mentioned the Pearl Road corridor plan was finally coming to fruition, and with the recent visits from federal representatives he wanted to know if there was any talk about helping the City move forward with the comprehensive plan with regard to Pearl Road.

In response, Mr. Aungst stated there are multiple jurisdictions to work with on Pearl Road, which presents a challenge; to do all of Pearl Road was in the range of 60 million dollars. Mr. Aungst thought the comprehensive plan will address parts of Pearl Road. He mentioned in speaking with the federal representatives on monies and grants, and noted so is everybody else. He brought up the slip ramp on Center Road which was a million dollars; he also mentioned the City was trying to get the south industrial parkway done, which $200,000 dollars is committed to that project, with the hopes of getting an additional $250,000 dollars through grants.

Regarding the moratorium legislation Mr. Hanek recommended legislation be placed directly to the Committee of the Whole or the Economic Development committee.

Mr. Ousley asked about Chick-fil-A and future discussions with Planning Commission, and if they were going to be a go; and Mr. Aungst indicated they will be discussing their detailed site plan with Planning Commission, and he noted they were close.

Mr. Ousley brought up Pearl Road and bringing Brunswick Hills Township on board with the Pearl Road Corridor. He recommended a joint bus trip with Council, Brunswick Hills Trustees, Planning Commission and the BZA.

Mrs. Hanek interjected she attended the last bus trip in 2011; Council, Brunswick Hills Trustees, the media and the City Manager attended.

Mr. Ousley thought something has to happen to come up with a happy medium with the Pearl Road corridor and he mentioned the pockets of Brunswick Hills Township on Center Road.

Mr. Hanek pointed out a lot of the different pockets Mr. Ousley was talking about have come into the City, for various reasons, and he had some ideas which he will be bringing to the committee that will be helpful and accomplish some of the same goals versus doing a bus trip.

Mr. Ousley advised legislation to extend the apartment moratorium will also be on the Council Agenda as an emergency.

A comment was made by Mr. Ousley about the importance of building buildings to put people to work not just for people to live. Mr. Aungst interjected it will always be a challenge to have that balance, since Brunswick is an ideal location.

Member of the Planning Commission John Rocha was in the audience, he mentioned at one time the City was talking of doing a JEDD with Brunswick Hills Township without annexation.

In conclusion Mr. Hanek mentioned some ideas to the committee regarding future meetings; holding them at alternate locations such as the BAT studio, local businesses, or to have a question/answer session. This was something for the committee to consider for future meetings.

ADJOURNMENT:

Being no further business, Mrs. Hanek moved to adjourn at 6:30 p.m. Vote – 3 Ayes, 0 Nays.

Respectfully submitted,

Nicholas Hanek
Chairman

FINANCE COMMITTEE MEETING

June 24, 2019

IN ATTENDANCE: Chairwoman Patricia Hanek, Committee Member Joseph Delsanter, Committee Member Brian Ousley, Andrea Rodriguez, Nicholas Hanek, Michael Abella Jr., Law Director Kenneth Fisher, Service Director Paul Barnett, City Manager/Safety Director Carl Deforest, Engineer Matt Jones, Finance Director Todd Fischer, Council Clerk Fijabi Julien-Gallam, Assistant Clerk of Council Val Zak, Assistant Clerk of Council Holly Quellos, News Media.

The meeting convened at 6:40 p.m.

REVIEW LEGISLATION:

ORD. NO. 42-19: An emergency ordinance to advance funds.

Mr. Fischer explained that this ordinance pertains to three different advances all relating to grants that have been received. Two are relating to the Police Department - one is for the evidence room software and one for the radios. The third grant is for $200,000 for reimbursement for a portion of the city's cost for the recycle carts.

Mr. Delsanter moved this ordinance to tonight's Council Agenda of June 24, 2019 as an emergency with suspension of the rules. Vote – 3 Ayes, 0 Nays.

ORD. NO. 43-19: An emergency ordinance authorizing the transfer of the remaining balances in the Special Assessment Grafton Road III Bond Retirement Sub-Fund to the General Obligation Bond Retirement Fund.

Mr. Fischer explained there are interest revenue funds remaining in the Special Grant Bond Retirement. There is approximately $567.91 remaining in the Bond Fund. He is expecting to clean up the books at the end of June.

Mr. Ousley moved this ordinance to tonight's Council Agenda of June 24, 2019 as an emergency with suspension of the rules. Vote – 3 Ayes, 0 Nays.

ORD. NO. 44-19: An emergency ordinance amending Ordinances #89-18 and #20-19 to include amendments to the appropriations budget for the year ending December 31, 2019 as incorporated in Exhibit "A" attached hereto.

Mr. Fischer explained that most of the items in the proposed budget are related to grants or advances that were previously discussed. Those related to expenditure funds that are significant are approximately $308,000. Mr. Fischer explained that his amount includes the additional gas tax increase from the state legislator to spend on road improvements. Mr. Fischer is anticipating some of those funds in August. All of the funds will not be received until December. This estimate is from the Ohio Department of Transportation.

Mr. Ousley asked if there was a wish list for those funds, and Mr. Barnett indicated there would soon be a motion addressing the budgeted items.

Mr. Fischer indicated that there are a few hundred thousand dollar grants from the Ohio Environmental Protection Agency relating to the recycle carts. This was taken into account when the refuse rates were set for July 1st. Mr. Fischer explained that we also have $85,000 for radio equipment for the Division of Fire. He indicated there is a reduction of $135,000 because of Parks and Recreation Director's decision to delay the Waterline Replacement Project.

Mr. Delsanter moved this ordinance to tonight's Council Agenda of June 24, 2019 as emergency with suspension of the rules. Vote – 3 Ayes, 0 Nays.

GENERAL DISCUSSION:

There was none.

ADJOURNMENT:

Being no further business, Mr. Ousley moved to adjourn at 6:46 p.m. Vote – 3 Ayes, 0 Nays.

Respectfully submitted,

Patricia Hanek

Patricia Hanek
Chairwoman

PLANNING AND ZONING COMMITTEE

June 20, 2019

IN ATTENDANCE: Chairman Joseph Delsanter, Committee Member Andrea Rodriguez, Committee Member Nicholas Hanek, Community & Economic Development Director Grant Aungst, Planning & Zoning Coordinator Pam Plavecski, Residents.

The meeting convened at 6:21 p.m.

Mr. Hanek arrived a few minutes late.

GENERAL DISCUSSION:

Mr. Aungst presented information to the committee from the Environmental Law Institute an independent group in Washington, DC. The article discussed backyard poultry and a model ordinance for regulating chickens in a city. The article was informative; it talked about the benefits of chickens, challenges, zoning requirements, setbacks, health codes, slaughtering, permits, and what was best for the community.

Mr. Aungst commented on the residential property of Angela Palumbo that the committee visited he commended Mrs. Palumbo for a well maintained yard, chickens, and coop which allows the chickens to be healthy.

Mrs. Rodriguez did not understand the reasoning behind having legislation, she stated the City has a noise ordinance, a nuisance ordinance, and she understood there have not been any complaints about chickens, even the animal warden is not aware of chickens unless he goes out for a call for something else. She did not understand why the committee was spending so much time on this. Mrs. Rodriguez has received a number of calls from constituents that do not want to see this happen; she has not received any calls from people that want regulations.

In response, Mr. Aungst had some of the same calls but he has also had multiple people say chickens should not be permitted at all in backyards in the City. Currently the City does not have any type of regulations for chickens. He noted what the committee saw at Mrs. Palumbo's home was sixteen chickens in a well-manicured area, however there are some properties in the City that are not as well maintained.

Mrs. Rodriguez would like to see the property that has issues; she wants to see the facts.

Mr. Hanek apologized for arriving late; he addressed the issue of regulating chickens, Mr. Hanek noted he met with a couple of homeowners associations in his ward that are going to put in their association that chickens would be disruptive in their neighborhood and they do not want them. Mr. Hanek referred to the current ordinance addressing farm animals, and it was his belief if it was interpreted by a different administration the farm animal ordinance would be in place as it stands, he further believes some type of action needs to be taken.

Mr. Delsanter noted the administration asked Council to look into this, previously when this was done it was done on the wrong tact, he noted a structural code was not needed to enforce this type of issue. Mr. Delsanter stated it was the responsibility of this committee to discuss land uses. Mr. Delsanter thought some guide posts were needed so a neighbor's quality of life is not affected. He talked about neighborhood living, lot sizes and tolerance. Mr. Delsanter noted homeowners associations are taking their own action prohibiting any kind of farm animal activity within their development, and for people that live in non-designated homeowners associations they may need something as to how this would incorporate into their development.

It was the belief of Mr. Hanek that some type of legislation should be written, he has a lot of animal issues in his ward that he has to deal with, this is not the most pressing issue that he has encountered, however he believes some action needs to be taken to plan for the long term provisions of the City.

Mr. Aungst advised the administration will follow the lead of Council, however when people call asking if chickens are allowed, the administration has to be silent on the matter, and the administration was looking for guidance.

Mrs. Plavecski concurred with Mr. Aungst, she also expressed the administration would appreciate some type of guidance to give to residents and people considering moving into the City when they ask if they are allowed to have chickens.

Mr. Delsanter verified the position of Mrs. Rodriguez which was why bother doing this; and Mrs. Rodriguez stated her position was not only why bother, she was also leaning towards larger numbers and more freedom.

Mr. Hanek noted there are safety concerns to take into consideration also, he noted some people may have heat lamps on the chicks, and there is nothing on the books for regulations, he stated there has to be provisions and regulations.

Mr. Delsanter noted the City cannot oversee everything; however a lot of important issues have been brought up; the City is problematic on definitions and language defining farm animals; also as pointed out by Mrs. Rodriguez the code addresses certain nuisances. Continuing, Mr. Delsanter expressed the issue is whether or not the administration should pro-actively put in guide point hard lines on setbacks, quantities, breeding on site, and give courtesy to the neighbor without chickens. He stated the administration asked for guidance, and this committee would like to see setback numbers, size of lots, and framework to start. Mr. Delsanter knew of a resident that has a large number of chickens in a development and others that have chickens and he never knew were there; the question is how to deal with this.

Mr. Hanek moved for the legal department to draft a framework involving guidelines involving distance from yard lines, limitation on size of structure, and no roosters, and to come back to the committee for review. Vote – 2 Ayes, 1 Nay, Mrs. Rodriguez.

Prior to the vote Mr. Delsanter summarized the motion is to have the law department draft up framework language for the committee to review involving structures, yard lines, no roosters, and some type of limitation.

Mrs. Plavecski referenced the last page of the model ordinance from the handout provided by Mr. Aungst; she suggested submitting that to the law department.

Mr. Delsanter indicated he did not object for the law department having that information; however it would be customized to the City of Brunswick.

At this time Mr. Delsanter invited members of the audience to express their views on this discussion.

Scott Millich of 369 Crestway Oval – Mr. Millich asked at what point does the planning & zoning committee limit their actions, he thought the committee was over reaching. He brought up a property with seven cars in the driveway with no license plates, and Mr. Delsanter interjected the City has regulations about that.

Mr. Hanek addressed the car issue and complaints about yards and other situations that can be involved. He brought up animal laws for dogs and cats and the enforcement of those laws, he asked Mr. Millich if he thought there should be any limit or not.

Mr. Millich thought there should be, however his understanding was the City does have some type of ordinance regarding chickens.

Mr. Hanek interjected the City does not have an ordinance regarding chickens; there is no language in the code that states anything about chickens.

Mr. Hanek asked if Mr. Millich thought there should be something about structures, there was interjection from audience members relating to chicken coops, and it was noted by the committee that there was nothing in the City code addressing chicken coops, sheds were addressed not chicken coops.

Mr. Aungst explained sheds versus chicken coops; he stated chicken coops have live creatures in them, sheds have inanimate objects in them, he stated there is nothing in the City code for what constitutes a chicken coop.

Mr. Delsanter commented on the number of misconceptions relative to City codes, he expressed the point of this is not to stop what seems to be a cottage activity within suburban communities that people are finding as part of an organic lifestyle very useful to them, and not make it difficult for people to coexist. He noted the administration has asked for something to be written for guidelines on chickens, not for prohibition.

Resident of 625 Judy Lane – The resident commented she does not have chickens; however, she has a big enough yard to have many chickens. She brought up pit bulls and how a few bad apples

ruined it for everybody and laws have to be put in place. She did not think having more laws was the answer, guidelines maybe. Further she thought the City had safety rules and noise controls on the books. She asked if Mr. Delsanter lived in the community and he answered in the affirmative; noting as elected officials they have to live in the City. She did not think more regulations were the best thing. She noted more people are looking to produce their own food sources with eggs, and vegetable gardens for many reasons.

In closing, Mr. Delsanter thanked the audience for their constructive comments and hopes something was brought to light. He noted there was a long way to go on this; with the framework forthcoming.

ADJOURNMENT:

Being no further business, Mrs. Rodriguez moved to adjourn at 6:59 p.m. Vote – 3 Ayes, 0 Nays.

Respectfully submitted,

Joseph Delsanter
Chairman

COMMITTEE OF THE WHOLE MEETING

June 24, 2019

IN ATTENDANCE: Vice Mayor Michael Abella Jr., Nicholas Hanek, Andrea Rodriguez, Patricia Hanek, Brian Ousley, Joseph Delsanter, City Manager/Safety Director Carl DeForest, Law Director Kenneth Fisher, Engineer Matt Jones, Service Director Paul Barnett, Finance Director Todd Fischer, Council Clerk Fijabi Julien-Gallam, Assistant Clerk of Council Valerie Zak, Assistant Clerk of Council Holly Quellos, News Media.

The meeting convened at 6:54 p.m.

Mr. Delsanter moved to excuse Mr. Capretta for just cause. Vote – 6 Ayes, 0 Nays.

MOTIONS:

Motion authorizing the City Manager to advertise for public bids for the 2019 Catch Basin Repair Program:

Mr. Jones advised this program is similar in scope to previous years with preliminary construction costs of $90,000 dollars. This is a citywide program, with construction to start in August or September.

Mr. Hanek moved to authorize the City Manager to advertise for public bids for the 2019 Catch Basin Repair Program. Vote – 6 Ayes, 0 Nays.

Motion authorizing the City Manager to advertise for public bids for the 2019 asphalt Road Program Phase 2:

Mr. Fischer previously mentioned the gas tax revenue projections, and Mr. Jones indicated with that the City is proposing a second asphalt road program this year. He noted the asphalt program focused on concrete street overlays this year and minimal work was done on the asphalt roads. He noted the phase 2 program will focus on doing asphalt roads. The administration was proposing to do the next section of Pinewood, the south half of Starview Drive from Mars to Grafton, Chargary and Carolyn Drive, and depending on the budget Fernwood may also be done.

Mr. Delsanter asked about the Old Presidential area, and Mr. Jones advised the hope is to target CDBG funds for that area, if that is not successful the area will be looked at next year.

Mrs. Hanek pointed out a typographical error; it read the project would be advertised in March, and it should read June. Mr. Jones clarified bids will be advertised in June.

Mr. Abella asked if this project was coming out of the road levy funds, and Mr. Jones indicated the funding was coming from the additional gas tax revenue.

Mr. Fischer clarified by statute 92.5% of gas tax money has to go to streets.

Mr. Barnett indicated with engineering and construction inspection the program is close to $300,000 dollars, and Mr. Fischer was expecting a little over that in gas tax revenue.

Mr. Hanek interjected the streets being done were eligible for road levy funding.

Mr. Abella clarified this road project is in addition to work that was already proposed for this year.

Mr. Hanek moved to authorize the City Manager to advertise for public bids for the 2019 Asphalt Road Program Phase 2. Vote – 6 Ayes, 0 Nays.

REVIEW LEGISLATION:

ORD. NO. 39-19 – An emergency ordinance extending a temporary moratorium on the acceptance and processing of applications for the zoning, occupancy and/or building permit approvals for warehousing and motor freight garages and truck or transfer terminal uses in the I- L Light Industrial District and the issuance of such approvals

Mr. Hanek noted this legislation extends the moratorium in the I-L Light Industrial District while awaiting the completion of the Comprehensive Plan.

Mr. Hanek moved this ordinance to tonight's Council Agenda of June 24, 2019 as an emergency for three readings. Vote – 6 Ayes, 0 Nays.

ORD. NO. 40-19 – An emergency ordinance extending a temporary moratorium on the acceptance and processing of applications for zoning, occupancy, conditional use and /or building permit approvals for multi-family dwelling units in all zoning districts and the issuance of such approvals

Mr. Ousley noted while awaiting the completion of the Comprehensive Plan to review the best direction for the community; this legislation extends the moratorium for six months.

Mr. Ousley moved this ordinance to tonight's Council Agenda of June 24, 2019 as an emergency for three readings. Vote – 6 Ayes, 0 Nays.

RES. NO. 41-19 – An emergency resolution authorizing the City Manager to have entered into a Housing Revolving Loan Fund Administration Agreement with the State of Ohio, Development Services Agency

Mr. Fischer advised this agreement is required for the City to continue their community housing improvement program; the grant is administered through the City of Medina. He explained if someone receives federal monies to improve their home and meet the requirement of the grant a lien is placed on their home, and if they sell that home they may owe back certain money, and in order for the City to collect that money back and release the lien this agreement has to be in place.

Mr. Delsanter moved this resolution to tonight's Council Agenda of June 24, 2019 as an emergency with suspension of the rules. Vote – 6 Ayes, 0 Nays.

RES. NO. 45-19 – An emergency resolution ratifying the actions of the City Manager in executing the 2019 Community Litter Grant Agreement with the Ohio Environmental Protection Agency

Mr. Barnett advised the City Manager signed the agreement and this legislation allows for the City to be reimbursed $200,000 dollars for carts; this legislation ratifies the action of the City Manager.

Mr. Fisher clarified the agreement had a deadline of Monday, June 17, therefore he authorized the City Manager to sign the agreement subject to City Council having discussed it at the last Committee of the Whole meeting. He stated this is not normally done this way but there was a very short turn around.

Mr. Barnett stated the administration received the agreement from the State two weeks ago, and it had to be signed by the next Monday, otherwise the City would not have received the $200,000 dollar grant.

Mr. Delsanter wanted to know if everyone was at that meeting, and Mr. Fisher indicated it was discussed by everyone.

Mr. Fisher stated the City was accepting a grant, and Council always has the legal authority to ratify a prior action.

Mrs. Hanek moved this resolution to tonight's Council Agenda of June 24, 2019 as an emergency with suspension of the rules. Vote – 6 Ayes, 0 Nays.

GENERAL DISCUSSION:

Mr. Barnett updated the committee on the distribution of trash carts which started today with those residents with Monday pickup, he advised they started distribution in the Waite Farms area and were moving west.

Mr. Abella interjected he received his carts today.

Mr. Barnett was advised by the contractor that they dropped off carts to nearly half of the Monday pick up area. He noted calls started coming in today about the carts and most were from people that want the smaller carts. He explained 96 gallon carts were being delivered to everyone, and if they want to swap out for a 64 gallon cart they can do that. However they will not be swapped out until the entire City is done which will be about three weeks.

Mr. Abella asked about the contractor picking up residents old trash cans if they had to put a note on them, and to that Mr. Barnett noted they will pick them up starting at the next week pick up.

Mrs. Rodriguez was encouraging her constituents to try the larger carts before calling for the smaller carts.

Mr. Barnett concurred; he explained Republic Waste has the City as manual trash collection until everyone receives their carts, so he would encourage people to wait three weeks before calling Republic Waste requesting smaller carts. Mr. Barnett noted some of the condominium associations that either have single car garages or no garages are receiving the 64 gallon carts.

ADJOURNMENT:

Being no further business Mr. Hanek moved to adjourn at 7:13 p.m. Vote – 6 Ayes, 0 Nays.

Respectfully submitted,

Valerie Zak

Valerie Zak
Assistant Clerk of Council

THE CITY OF BRUNSWICK

PROPOSED LEGISLATION

DATE: 7/8/2019

TO: Vice Mayor Michael Abella Jr. and Members of City Council

FROM: Carl S. DeForest, City Manager
Paul Barnett

COPY: Mayor Ron Falconi

LEGISLATION: **ORD. NO. 37-19** - An emergency ordinance amending Chapter 1060 of the City of Brunswick Codified Ordinances. - **3rd Reading** (Committee-of-the-Whole, *Administration/Paul Barnett*)

BACKGROUND: City Council approved a change from manual trash collection to a semi-automated trash and recycle curbside collection using City provided carts. Due to the changes in process, the existing Codified Ordinances will be out of date when the new program is initiated. The new process will begin on July 1, 2019 and will take up to 3 weeks to be fully implemented.

PURPOSE AND EXPLANATION: The exiting Codified Ordinances are intended to be for the existing manual curbside trash collection. With a new semi-automated curbside trash and recycle program using City provided carts, the Codified Ordinances are in need of updating

IMPLEMENTATION SCHEDULE: 3rd reading on July 8, 2019 and adopted as an emergency.

FINANCIAL INFORMATION:

FINANCIAL SUMMARY:

RECOMMENDED ACTION:

One Reading	No
Two Readings	No
Three Readings	Yes
Emergency	Yes
Suspension of Rules	No

If emergency or suspension of the rules, why the request?
Emergency is requested in order to assure the revised Codified Ordinances are in place once the new program is fully implemented in mid July 2019.

ADDITIONAL INFORMATION:

CITY OF BRUNSWICK, OHIO
ORDINANCE NO. _____

BY:

AN EMERGENCY ORDINANCE AMENDING CHAPER 1060 OF THE CITY OF BRUNSWICK CODIFIED ORDINANCES.

WHEREAS: THE COUNCIL OF THE CITY OF BRUNSWICK HEREBY ORDAINS:

SECTION 1: That Chapter 1060 of the Codified Ordinances is hereby amended to read as follows:

"**1060.01 ACCUMULATIONS OF GARBAGE, ~~AND~~ RUBBISH AND RECYCLABLES.**

No person shall accumulate garbage, ~~or~~ rubbish or recyclables on private property for a longer period than that covered by the weekly pickup periods of the contract hauler.

1060.02 CONTRACT OR PERMIT REQUEST.

(a) No person shall collect garbage, ~~or~~ rubbish or recyclables within the City without first obtaining a valid permit or entering into a valid contract with the City as provided for in these ordinances or the resolutions of the City.

(b) A permit may be issued by the Director of Public Service, without fee, under either of the following conditions:

(1) For hauling of rubbish, bulk rubbish, ~~or~~ construction waste or recyclables only from the premises of the permittee for a twenty-four hour period.

(2) For the removal of specifically enumerated items that were previously discarded as rubbish, bulk rubbish, ~~or~~ construction waste or recyclables provided the permittee can produce written permission from the owner of said ~~waste~~ materials indicating transference of the property to the permittee, fully describing said items to be removed, and assurance that said removal will not create conditions that are hazardous to the public. The permit shall be valid for only a twenty-four hour period and must include a description of items to be removed.

(c) Notwithstanding any other provision of these Codified Ordinances, the hours of garbage, ~~or~~ rubbish or recyclables collection with the City of Brunswick shall be between the hours of 7:00 a.m. and 7:00 p.m., Monday through Saturday, except as such hours may be extended by the City Manager.

1060.03 SERVICE CHARGES.

(a) ~~(1)~~ Residences. There shall be a monthly charge to each householder for the weekly collection, transportation and disposal of residential solid waste, ~~and~~ yard waste and recyclables. The monthly charge shall include each resident's pro rata share of the contract hauler's current

charge to the City under the contract and a service charge for billing, collecting and managing the monthly charge. The monthly charge shall be billed quarterly in advance. A penalty of eighteen percent (18%) shall be charged on all accounts delinquent in excess of ten days after the expiration of the billing period.

~~(2) Grass Clippings. Effective April 1, 2004 tags required for pickup of bags/containers of grass clippings will be provided without a fee. Effective May 1, 2005 tags will not be required for pickup of grass clippings.~~

(b) Billing. The City, through the office of the Director of Finance, shall make the billing charges and collections set forth in subsection (a) hereof.

(c) Notice. Notice of any hearing pertaining to rates for services rendered under this chapter shall be given to all interested persons at least seven days before the date set for such hearing. The kind of notice, the place of hearing and all facts connected with or relating to such hearing shall be regulated by Council.

(d) Financial Reports. A financial statement of profit and loss shall be filed with the Director of Public Service by contract haulers for each calendar year, within ninety days after the close of such year.

(e) Delinquent Accounts. The previous balance of delinquent amounts shall be shown once each year on the July billing and shall be stamped~~, in red,~~ "FINAL NOTICE." If payment is not received within thirty days, the Director of Finance shall make a written return to the County Auditor and such amounts, when allowed, shall be entered upon the tax duplicate, shall be a lien upon the land from the date of entry and shall be collected as other taxes and returned to the City with the General Fund.

1060.04 UNCOLLECTED GARBAGE, ~~AND~~ RUBBISH AND RECYCLABLES.

Fermenting, putrefying or odoriferous garbage in containers or dumped in the open is hereby declared to be a nuisance. Rubbish or recyclables stored in receptacles or containers or in piles on premises in possession of the party responsible therefor for a period exceeding thirty days is also declared to be a nuisance. Such nuisances are prohibited, and the person responsible for either or both of them shall be subject to the penalty provided in Section 1060.99.

1060.05 WAIVER OF CHARGES.

Effective July 1, 2011, any homeowner, in the City, that has been granted a Homestead Exemption as of January 1, 2007, as certified by the County Auditor, shall be exempt from the regular garbage and rubbish service collection charges except for a charge of eleven dollars and thirty-five cents ($11.35) per month. Any homeowner in the City who has not previously obtained a Homestead Exemption as of January 1, 2007, shall be charged a monthly rate as provided in Section 1060.03.

1060.06 HOURS FOR PLACING GARBAGE, ~~AND~~ RUBBISH AND RECYCLABLES OUT FOR PICK-UP.

~~(a) April 1st through October 31st. No earlier than 6:00 p.m. the day before regularly~~

~~scheduled pick-up day.~~

~~(b) November 1st through March 31st. No earlier than 4:00 p.m. the day before your regularly scheduled pick-up day.~~

Garbage, rubbish and recyclables are to be set out no earlier than 4:00 p.m. the day before the regularly scheduled pick-up date. All carts are to be removed from the right-of-way no later than 8:00 p.m. the day of the regularly scheduled pick-up date.

1060.06 GARBAGE, RUBBISH AND RECYCLABLE RULES AND REGULATIONS.

The curbside garbage, rubbish and recyclable collection program will utilize carts provided by the City. No other containers will be permitted. The rules and regulations for the program shall be as established, from time to time, by the Service Director.

1060.99 PENALTY.

Whoever violates or fails to comply with any of the provisions of this chapter or the rules and regulations as established by the Service Director is guilty of a minor misdemeanor and shall be fined not more than one hundred and fifty dollars ($15~~0~~0.00) per offense. A separate offense shall be deemed committed each day during or on which a violation or noncompliance occurs or continues."

SECTION 2: That this Ordinance is declared to be an emergency measure necessary for the immediate preservation of the public peace, property, health, welfare and safety of the City and for the additional reason to be effective as of the July 9, 2019 anticipated delivery date of the garbage/recycling carts. Therefore, the same shall be in full force and effect from and after its passage by the required number of votes.

PASSED: 1st Reading_____

2nd Reading_____

3rd Reading_____

ADOPTED: _____ AYES _____ NAYS _____

ATTEST: _____
Clerk of Council
Fijabi Julien-Gallam, CMC

CITY OF BRUNSWICK, OHIO
ORDINANCE NO. 37-19

BY: Committee-of-the-Whole

AN EMERGENCY ORDINANCE AMENDING CHAPER 1060 OF THE CITY OF BRUNSWICK CODIFIED ORDINANCES.

WHEREAS: THE COUNCIL OF THE CITY OF BRUNSWICK HEREBY ORDAINS:

SECTION 1: That Chapter 1060 of the Codified Ordinances is hereby amended to read as follows:

"**1060.01 ACCUMULATIONS OF GARBAGE, ~~AND~~ RUBBISH AND RECYCLABLES.**

No person shall accumulate garbage, ~~or~~ rubbish or recyclables on private property for a longer period than that covered by the weekly pickup periods of the contract hauler.

1060.02 CONTRACT OR PERMIT REQUEST.

(a) No person shall collect garbage, ~~or~~ rubbish or recyclables within the City without first obtaining a valid permit or entering into a valid contract with the City as provided for in these ordinances or the resolutions of the City.

(b) A permit may be issued by the Director of Public Service, without fee, under either of the following conditions:

(1) For hauling of rubbish, bulk rubbish, ~~or~~ construction waste or recyclables only from the premises of the permittee for a twenty-four hour period.

(2) For the removal of specifically enumerated items that were previously discarded as rubbish, bulk rubbish, ~~or~~ construction waste or recyclables provided the permittee can produce written permission from the owner of said ~~waste~~ materials indicating transference of the property to the permittee, fully describing said items to be removed, and assurance that said removal will not create conditions that are hazardous to the public. The permit shall be valid for only a twenty-four hour period and must include a description of items to be removed.

(c) Notwithstanding any other provision of these Codified Ordinances, the hours of garbage, ~~or~~ rubbish or recyclables collection with the City of Brunswick shall be between the hours of 7:00 a.m. and 7:00 p.m., Monday through Saturday, except as such hours may be extended by the City Manager.

1060.03 SERVICE CHARGES.

(a) ~~(1)~~ Residences. There shall be a monthly charge to each householder for the weekly collection, transportation and disposal of residential solid waste, ~~and~~ yard waste and recyclables. The monthly charge shall include each resident's pro rata share of the contract hauler's current

charge to the City under the contract and a service charge for billing, collecting and managing the monthly charge. The monthly charge shall be billed quarterly in advance. A penalty of eighteen percent (18%) shall be charged on all accounts delinquent in excess of ten days after the expiration of the billing period.

~~(2) Grass Clippings. Effective April 1, 2004 tags required for pickup of bags/containers of grass clippings will be provided without a fee. Effective May 1, 2005 tags will not be required for pickup of grass clippings.~~

(b) Billing. The City, through the office of the Director of Finance, shall make the billing charges and collections set forth in subsection (a) hereof.

(c) Notice. Notice of any hearing pertaining to rates for services rendered under this chapter shall be given to all interested persons at least seven days before the date set for such hearing. The kind of notice, the place of hearing and all facts connected with or relating to such hearing shall be regulated by Council.

(d) Financial Reports. A financial statement of profit and loss shall be filed with the Director of Public Service by contract haulers for each calendar year, within ninety days after the close of such year.

(e) Delinquent Accounts. The previous balance of delinquent amounts shall be shown once each year on the July billing and shall be stamped~~, in red,~~ "FINAL NOTICE." If payment is not received within thirty days, the Director of Finance shall make a written return to the County Auditor and such amounts, when allowed, shall be entered upon the tax duplicate, shall be a lien upon the land from the date of entry and shall be collected as other taxes and returned to the City with the General Fund.

1060.04 UNCOLLECTED GARBAGE, ~~AND~~ RUBBISH AND RECYCLABLES.

Fermenting, putrefying or odoriferous garbage in containers or dumped in the open is hereby declared to be a nuisance. Rubbish or recyclables stored in receptacles or containers or in piles on premises in possession of the party responsible therefor for a period exceeding thirty days is also declared to be a nuisance. Such nuisances are prohibited, and the person responsible for either or both of them shall be subject to the penalty provided in Section 1060.99.

1060.05 WAIVER OF CHARGES.

Effective July 1, 2011, any homeowner, in the City, that has been granted a Homestead Exemption as of January 1, 2007, as certified by the County Auditor, shall be exempt from the regular garbage and rubbish service collection charges except for a charge of eleven dollars and thirty-five cents ($11.35) per month. Any homeowner in the City who has not previously obtained a Homestead Exemption as of January 1, 2007, shall be charged a monthly rate as provided in Section 1060.03.

1060.06 HOURS FOR PLACING GARBAGE, ~~AND~~ RUBBISH AND RECYCLABLES OUT FOR PICK-UP.

~~(a) April 1st through October 31st. No earlier than 6:00 p.m. the day before regularly~~

~~scheduled pick-up day.~~

~~(b) November 1st through March 31st. No earlier than 4:00 p.m. the day before your regularly scheduled pick-up day.~~

Garbage, rubbish and recyclables are to be set out no earlier than 4:00 p.m. the day before the regularly scheduled pick-up date. All carts are to be removed from the right-of-way no later than 8:00 p.m. the day of the regularly scheduled pick-up date.

1060.06 GARBAGE, RUBBISH AND RECYCLABLE RULES AND REGULATIONS.

The curbside garbage, rubbish and recyclable collection program will utilize carts provided by the City. No other containers will be permitted. The rules and regulations for the program shall be as established, from time to time, by the Service Director.

1060.99 PENALTY.

Whoever violates or fails to comply with any of the provisions of this chapter or the rules and regulations as established by the Service Director is guilty of a minor misdemeanor and shall be fined not more than one hundred and fifty dollars ($15~~0~~0.00) per offense. A separate offense shall be deemed committed each day during or on which a violation or noncompliance occurs or continues."

SECTION 2: That this Ordinance is declared to be an emergency measure necessary for the immediate preservation of the public peace, property, health, welfare and safety of the City and for the additional reason to be effective as of the July 9, 2019 anticipated delivery date of the garbage/recycling carts. Therefore, the same shall be in full force and effect from and after its passage by the required number of votes.

PASSED: 1st Reading_____

2nd Reading_____

3rd Reading_____

ADOPTED: _____ AYES _____ NAYS _____

ATTEST: _____
Clerk of Council
Fijabi Julien-Gallam, CMC

THE CITY OF BRUNSWICK

PROPOSED LEGISLATION

DATE: 7/8/2019

TO: Vice Mayor Michael Abella Jr. and Members of City Council

FROM: Carl S. DeForest, City Manager
Paul Barnett

COPY: Mayor Ron Falconi

LEGISLATION: **RES. NO. 38-19** - An emergency resolution authorizing the City Manager to enter into a three (3) year agreement with Zimmerman Paint Contractors, CO. for the provision of pavement marking services. - **3rd Reading** (Services, Utilities, Technology & Cable Committee, *Administration/Paul Barnett*)

BACKGROUND: City Council previously approved a motion to advertise for bids for pavement marking. The City requested bids for traditional traffic paint pavement striping for City streets. Included in each year's bid is a price to perform optional pavement markings in City owned parking lots. These are optional and are included in the award for years 2 and 3. There will be no parking lot striping done in 2019.

PURPOSE AND EXPLANATION: Bids were opened on May 28, 2019 from two (2) bidders. Zimmerman Paint was the lowest and best bidder at $63,328.32 for the first year; $67,470.10 for the second year and $72,016.70 for the third year. Staff has adjusted the scope of the work for the first year of the contract (2019) to non-perform a portion of the pavement marking on North Carpenter and Laurel Road that will be under construction in 2019. The scope was also adjusted to non-perform the optional city parking lot striping for the first year of the contract (2019). As a result, the first year of the contract will be $52,237.39.

IMPLEMENTATION SCHEDULE: 3rd reading on July 8, 2019 and adopted as an emergency.

FINANCIAL INFORMATION: Pavement marking services - - - - -

FINANCIAL SUMMARY: **2019**-$52,237.39 Account 117-0420-54259(Roadway)

The first year of the contract is not to exceed the $52,237.39 amount shown on the "2019 Pavement Marking Quantities and Costs from Low Bid" document, as adjusted from the low bid amount of $63,328.32 due to adjustments to the scope of the work.

Years two and three of the contract are not to exceed the low bid amounts of $67,470.10 and $72,016.70 respectively and are contingent upon future appropriations adopted by Council. If

sufficient appropriations are adopted by City Council in subsequent years, it is likely the fund/account breakdown will be as follows:

2020-$62,020.10 Account 117-0420-54259(Roadway)
$ 500.00 Account 123-0460-54243(BAT)
$ 750.00 Account (City Hall) (Todd, please provide acct. code)
$ 2,200.00 Account 127-0810-54273 (Neura Park)
$ 2,000.00 Account 131-0830-54236 (Recreation Center)

2021-$66,566.70 Account 117-0420-54259(Roadway)
$ 500.00 Account 123-0460-54243(BAT)
$ 750.00 Account (City Hall) (Todd, please provide
$ 2,200.00 Account 127-0810-54273(Neura Park)
$ 2,000.00 Account 131-0830-54236(Recreation Center)

RECOMMENDED ACTION:

One Reading	No
Two Readings	No
Three Readings	Yes
Emergency	Yes
Suspension of Rules	No

If emergency or suspension of the rules, why the request?
Emergency is requested in order to assure the roadway stripping can be completed in 2019.

ADDITIONAL INFORMATION:

Pavement Marking Bids Tabulations 5/28/2019 at Noon

Bid for First Year of Contract-2019						Bid Tabs			
						Bid Bond	Yes	Bid Bond	Yes
All Markings to be As Per ODOT #406-10 (White) & #406-55 (Yellow) or Approved Equal						Zimmerman		A&A Safety	
Description-All ITEM 642	Estimated Quantity	Units	2018 Bid	5% Increase for 2019	Estimated Cost	Bid	Cost	Bid	Cost
Edge Line, 4" Type 1 Solid, White	6.34	Miles	$430.00	$451.50	$2,862.51	$500.00	$3,170.00	$600.00	$3,804.00
Lane Line, 4" Type 1 Broken, White	6.12	Miles	$310.00	$325.50	$1,992.06	$375.00	$2,295.00	$540.00	$3,304.80
Center Line, Type 1	27.59	Miles	$560.00	$588.00	$16,222.92	$610.00	$16,829.90	$700.00	$19,313.00
Channelization Line, 8", Type 1	13,477.00	Foot	$0.36	$0.38	$5,094.31	$0.36	$4,851.72	$0.45	$6,064.65
Stop Line, Type 1	3,597.00	Foot	$1.20	$1.26	$4,532.22	$1.20	$4,316.40	$1.25	$4,496.25
Crosswalk Line, Type 1	20,205.00	Foot	$0.46	$0.48	$9,759.02	$0.46	$9,294.30	$0.65	$13,133.25
Transverse/Diagonal Line, Type 1	3,344.00	Foot	$1.25	$1.31	$4,389.00	$1.25	$4,180.00	$1.15	$3,845.60
Lane Arrow, Type 1	316.00	Each	$25.00	$26.25	$8,295.00	$25.00	$7,900.00	$45.00	$14,220.00
School Symbol Marking, Type 1	27.00	Each	$120.00	$126.00	$3,402.00	$120.00	$3,240.00	$250.00	$6,750.00
Word on Pavement, Type 1	34.00	Each	$37.00	$38.85	$1,320.90	$37.00	$1,258.00	$55.00	$1,870.00
Island Marking, Type 1	181.00	Sq. Ft.	$3.00	$3.15	$570.15	$3.00	$543.00	$1.15	$208.15
				Total	**$58,440.08**		**$57,878.32**		**$77,009.70**
Optional Facility Pavement Markings									
BAT TV Parking Lot	1.00	Lump	$450.00	$472.50	$472.50	$500.00	$500.00	$2,000.00	$2,000.00
City Hall Parking Lot	1.00	Lump	$700.00	$735.00	$735.00	$750.00	$750.00	$2,500.00	$2,500.00
Neura Park Parking Lot	1.00	Lump	$600.00	$630.00	$630.00	$2,200.00	$2,200.00	$2,500.00	$2,500.00
Recreation Center Parking Lot	1.00	Lump	$1,800.00	$1,890.00	$1,890.00	$2,000.00	$2,000.00	$500.00	$500.00

Bid for Second Year of Contract-2020						Bid Tabs			
All Markings to be As Per ODOT #406-10 (White) & #406-55 (Yellow) or Approved Equal						Zimmerman		A&A Safety	
Description-All ITEM 642	Estimated Quantity	Units	2018 Bid	7% Increase for 2019	Estimated Cost	Bid	Cost	Bid	Cost
Edge Line, 4" Type 1 Solid, White	6.34	Miles	$430.00	$460.10	$2,917.03	$525.00	$3,328.50	$750.00	$4,755.00
Lane Line, 4" Type 1 Broken, White	6.12	Miles	$310.00	$331.70	$2,030.00	$400.00	$2,448.00	$675.00	$4,131.00
Center Line, Type 1	27.59	Miles	$560.00	$599.20	$16,531.93	$615.00	$16,967.85	$875.00	$24,141.25
Channelization Line, 8", Type 1	13,477.00	Foot	$0.36	$0.39	$5,191.34	$0.40	$5,390.80	$0.55	$7,412.35
Stop Line, Type 1	3,597.00	Foot	$1.20	$1.28	$4,618.55	$1.25	$4,496.25	$1.55	$5,575.35
Crosswalk Line, Type 1	20,205.00	Foot	$0.46	$0.49	$9,944.90	$0.50	$10,102.50	$0.80	$16,164.00
Transverse/Diagonal Line, Type 1	3,344.00	Foot	$1.25	$1.34	$4,472.60	$1.30	$4,347.20	$1.45	$4,848.80
Lane Arrow, Type 1	316.00	Each	$25.00	$26.75	$8,453.00	$30.00	$9,480.00	$55.00	$17,380.00
School Symbol Marking, Type 1	27.00	Each	$120.00	$128.40	$3,466.80	$125.00	$3,375.00	$310.00	$8,370.00
Word on Pavement, Type 1	34.00	Each	$37.00	$39.59	$1,346.06	$40.00	$1,360.00	$70.00	$2,380.00
Island Marking, Type 1	181.00	Sq. Ft.	$3.00	$3.21	$581.01	$4.00	$724.00	$1.45	$262.45
				Total	**$59,553.23**		**$62,020.10**		**$95,420.20**

Optional Facility Pavement Markings									
BAT TV Parking Lot	1.00	Lump	$450.00	$481.50	$481.50	$500.00	$500.00	$2,500.00	$2,500.00
City Hall Parking Lot	1.00	Lump	$700.00	$749.00	$749.00	$750.00	$750.00	$3,125.00	$3,125.00
Neura Park Parking Lot	1.00	Lump	$600.00	$642.00	$642.00	$2,200.00	$2,200.00	$3,125.00	$3,125.00
Recreation Center Parking Lot	1.00	Lump	$1,800.00	$1,926.00	$1,926.00	$2,000.00	$2,000.00	$625.00	$625.00

Bid for Third Year of Contract-2021						**Bid Tabs**			
All Markings to be As Per ODOT #406-10 (White) & #406-55 (Yellow) or Approved Equal						**Zimmerman**		**A&A Safety**	
Description-All ITEM 642	Estimated Quantity	Units	2018 Bid	9% Increase for 2019	Estimated Cost	Bid	Cost	Bid	Cost
Edge Line, 4" Type 1 Solid, White	6.34	Miles	$430.00	$468.70	$2,971.56	$550.00	$3,487.00	$940.00	$5,959.60
Lane Line, 4" Type 1 Broken, White	6.12	Miles	$310.00	$337.90	$2,067.95	$425.00	$2,601.00	$845.00	$5,171.40
Center Line, Type 1	27.59	Miles	$560.00	$610.40	$16,840.94	$620.00	$17,105.80	$1,095.00	$30,211.05
Channelization Line, 8", Type 1	13,477.00	Foot	$0.36	$0.39	$5,288.37	$0.45	$6,064.65	$0.70	$9,433.90
Stop Line, Type 1	3,597.00	Foot	$1.20	$1.31	$4,704.88	$1.30	$4,676.10	$1.95	$7,014.15
Crosswalk Line, Type 1	20,205.00	Foot	$0.46	$0.50	$10,130.79	$0.55	$11,112.75	$1.00	$20,205.00
Transverse/Diagonal Line, Type 1	3,344.00	Foot	$1.25	$1.36	$4,556.20	$1.35	$4,514.40	$1.80	$6,019.20
Lane Arrow, Type 1	316.00	Each	$25.00	$27.25	$8,611.00	$35.00	$11,060.00	$70.00	$22,120.00
School Symbol Marking, Type 1	27.00	Each	$120.00	$130.80	$3,531.60	$130.00	$3,510.00	$390.00	$10,530.00
Word on Pavement, Type 1	34.00	Each	$37.00	$40.33	$1,371.22	$45.00	$1,530.00	$90.00	$3,060.00
Island Marking, Type 1	181.00	Sq. Ft.	$3.00	$3.27	$591.87	$5.00	$905.00	$1.80	$325.80
				Total	**$60,666.37**		**$66,566.70**		**$120,050.10**
Optional Facility Pavement Markings									
BAT TV Parking Lot	1.00	Lump	$450.00	$490.50	$490.50	$500.00	$500.00	$3,125.00	$3,125.00
City Hall Parking Lot	1.00	Lump	$700.00	$763.00	$763.00	$750.00	$750.00	$3,910.00	$3,910.00
Neura Park Parking Lot	1.00	Lump	$600.00	$654.00	$654.00	$2,200.00	$2,200.00	$3,910.00	$3,910.00
Recreation Center Parking Lot	1.00	Lump	$1,800.00	$1,962.00	$1,962.00	$2,000.00	$2,000.00	$785.00	$785.00

Bid Synopsis		**Bid Tabs**			
		Bid Bond	**Yes**	**Bid Bond**	**Yes**
		Zimmerman		**A&A Safety**	
	Estimated Cost		**Cost**		**Cost**
First year, 2019 Roadway Markings	$58,440.08		$57,878.32		$77,009.70
Optional Facilities	$3,727.50		$5,450.00		$7,500.00
Total Cost	$62,167.58		$63,328.32		$84,509.70
Second Year, 2020 Roadway Markings	$59,553.23		$62,020.10		$95,420.20
Optional Facilities	$3,798.50		$5,450.00		$9,375.00
Total Cost	$63,351.73		$67,470.10		$104,795.20
Third Year, 2021 Roadway Markings	$60,666.37		$66,566.70		$120,050.10
Optional Facilities	$3,869.50		$5,450.00		$11,730.00
Total Cost	$64,535.87		$72,016.70		$131,780.10
Three Year Total Roadway Markings	$178,659.68		$186,465.12		$292,480.00
Three Year Total Optional Facilities	$11,395.50		$16,350.00		$28,605.00
Three Year Total Cost	$190,055.18		$202,815.12		$321,085.00

CITY OF BRUNSWICK, OHIO
RESOLUTION NO. 38-19

BY: Mrs. Rodriguez, Mr. Capretta, and Mr. Hanek

AN EMERGENCY RESOLUTION AUTHORIZING THE CITY MANAGER TO ENTER INTO A THREE (3) YEAR AGREEMENT WITH ZIMMERMAN PAINT CONTRACTORS, CO. FOR THE PROVISION OF PAVEMENT MARKING SERVICES.

WHEREAS: The City of Brunswick received two (2) bids for the Pavement Marking Program (the "Program"), in accordance with public bidding requirements; and

WHEREAS: The two (2) received public bids were opened on May 28, 2019, with Zimmerman Paint Contractors, Co. determined to be the lowest and best bidder.

WHEREAS: THE COUNCIL OF THE CITY OF BRUNSWICK HEREBY RESOLVES:

SECTION 1: That the City Manager, with the approval of the Law Director, is hereby authorized and directed to enter into a three (3) year Agreement with Zimmerman Paint Contractors, Co., the lowest and best bidder, for the Pavement Marking Program in an amount not exceed the submitted bid amounts for each respective year of the Program.

SECTION 2: That this Resolution is hereby declared to be an emergency measure necessary for the immediate preservation of the public peace, property, health, safety or welfare, and for the additional reason that immediate passage is necessary for completion of the first year of the Program during the 2019 construction season. Therefore, the same shall be in full force and effect from and after its passage by the required number of votes or from the earliest time allowed by law.

PASSED: 1st Reading_____

2nd Reading_____

3rd Reading_____

ADOPTED: _____ AYES _____ NAYS _____

ATTEST: _____
Clerk of Council
Fijabi Julien-Gallam, CMC

THE CITY OF BRUNSWICK

PROPOSED LEGISLATION

DATE: 7/8/2019

TO: Vice Mayor Michael Abella Jr. and Members of City Council

FROM: Carl S. DeForest, City Manager
Nicholas Hanek

COPY: Mayor Ron Falconi

LEGISLATION: **ORD. NO. 39-19** - An emergency ordinance extending a temporary moratorium on the acceptance and processing of applications for zoning, occupancy and/or building permit approvals for warehousing and motor freight garages and truck or transfer terminal uses in the I-L Light Industrial district and the issuance of such approvals. - **2nd Reading** (Committee-of-the-Whole, *Administration/Nicholas Hanek*)

BACKGROUND: On July 23, 2018, this Council adopted Ordinance No. 60-18, which established a six (6) month temporary moratorium on the acceptance and processing of applications for zoning, occupancy and/or building permit approvals for warehousing and motor freight garages and truck or transfer terminal uses in the I-L Light Industrial District in the City, which temporary moratorium is set to expire on January 23, 2019.

PURPOSE AND EXPLANATION: This Council believes that extending the temporary moratorium on the acceptance and processing of applications for zoning, occupancy and/or building permit approvals for warehousing and motor freight garages and truck or transfer terminal uses in the I-L Light Industrial District in the City, and on the issuance of such approvals, will not deny property owners economically viable use of their property and will permit the City Administration, Council and Planning Commission necessary time to undertake a review of the Brunswick Zoning Code and possible amendment thereof.

IMPLEMENTATION SCHEDULE:

FINANCIAL INFORMATION:

FINANCIAL SUMMARY:

RECOMMENDED ACTION:

One Reading	No
Two Readings	No
Three Readings	Yes

Emergency	Yes
Suspension of Rules	No

If emergency or suspension of the rules, why the request?
Requesting that this be an emergency to meet the timeline.

ADDITIONAL INFORMATION:

CITY OF BRUNSWICK, OHIO
ORDINANCE NO._____

BY:

AN EMERGENCY ORDINANCE EXTENDING A TEMPORARY MORATORIUM ON THE ACCEPTANCE AND PROCESSING OF APPLICATIONS FOR ZONING, OCCUPANCY AND/OR BUILDING PERMIT APPROVALS FOR WAREHOUSING AND MOTOR FREIGHT GARAGES AND TRUCK OR TRANSFER TERMINAL USES IN THE I-L LIGHT INDUSTRIAL DISTRICT AND THE ISSUANCE OF SUCH APPROVALS.

WHEREAS: On July 23, 2018, City Council adopted Ordinance No. 60-18, which established a six (6) month temporary moratorium on the acceptance and processing of applications for zoning, occupancy and/or building permit approvals for warehousing and motor freight garages and truck or transfer terminal uses in the I-L Light Industrial District in the City, which temporary moratorium is set to expire on January 23, 2019;

WHEREAS: On January 14, 2019, City Council adopted Ordinance No. 103-18 extending the temporary moratorium on the acceptance and processing of applications for zoning, occupancy and/or building permit approvals for warehousing and motor freight garages and truck or transfer terminal uses in the I-L Light Industrial District in the City for an additional six (6) months up to and including July 23, 2019;

WHEREAS: The City of Brunswick may legitimately regulate the location and approval of warehousing and motor freight garages and truck or transfer terminals, which are principally permitted uses in the I-L Light Industrial District per Codified Ordinance Section 1266.02(b) and (i), respectively; and

WHEREAS: This Council believes that extending the temporary moratorium on the acceptance and processing of applications for zoning, occupancy and/or building permit approvals for warehousing and motor freight garages and truck or transfer terminal uses in the I-L Light Industrial District in the City, and on the issuance of such approvals, will not deny property owners economically viable use of their property and will permit the City Administration, Council and Planning Commission necessary time to undertake a review of the Brunswick Zoning Code and possible amendment thereof.

WHEREAS: THE COUNCIL OF THE CITY OF BRUNSWICK HEREBY ORDAINS:

SECTION 1: The six (6) month temporary moratorium extension established by Ordinance No. 103-18 shall be extended for a period of six (6) months up to and including

January 23, 2020, wherein the City shall not accept or process any applications for zoning, occupancy and/or building permit approvals for warehousing and motor freight garages and truck or transfer terminal uses in the I-L Light Industrial District in the City, and further shall not issue any such approvals during said period.

SECTION 2: Whenever the provisions of this Ordinance conflict with any other Ordinance or
any provision of the Codified Ordinances of the City, the provisions of this Ordinance shall control.

SECTION 3: It is found and determined that all formal actions of this Council concerning and relating to the adoption of this Ordinance were adopted in an open meeting of this Council, and that all deliberations of this Council and any of its committees that resulted in such formal action, were in meetings open to the public, in compliance with all legal requirements, including Section 121.22 of the Ohio Revised Code.

SECTION 4: This Ordinance is hereby declared to be an emergency measure necessary for the immediate preservation of the public health, safety and general welfare of the City and its residents and property owners and for the additional reason that it is required to permit the City Administration, Council and Planning Commission necessary time to undertake a review of the Brunswick Zoning Code and possible amendment thereof. Therefore, the same shall be in full force and effect from and after its passage by the required number of votes or from the earliest time allowed by law.

PASSED: 1st Reading_____

2nd Reading_____

3rd Reading_____

ADOPTED: _____ AYES _____ NAYS _____

ATTEST: _____
Clerk of Council
Fijabi Julien-Gallam, CMC

CITY OF BRUNSWICK, OHIO
ORDINANCE NO. 39-19

BY: Committee-of-the-Whole

AN EMERGENCY ORDINANCE EXTENDING A TEMPORARY MORATORIUM ON THE ACCEPTANCE AND PROCESSING OF APPLICATIONS FOR ZONING, OCCUPANCY AND/OR BUILDING PERMIT APPROVALS FOR WAREHOUSING AND MOTOR FREIGHT GARAGES AND TRUCK OR TRANSFER TERMINAL USES IN THE I-L LIGHT INDUSTRIAL DISTRICT AND THE ISSUANCE OF SUCH APPROVALS.

WHEREAS: On July 23, 2018, City Council adopted Ordinance No. 60-18, which established a six (6) month temporary moratorium on the acceptance and processing of applications for zoning, occupancy and/or building permit approvals for warehousing and motor freight garages and truck or transfer terminal uses in the I-L Light Industrial District in the City, which temporary moratorium is set to expire on January 23, 2019;

WHEREAS: On January 14, 2019, City Council adopted Ordinance No. 103-18 extending the temporary moratorium on the acceptance and processing of applications for zoning, occupancy and/or building permit approvals for warehousing and motor freight garages and truck or transfer terminal uses in the I-L Light Industrial District in the City for an additional six (6) months up to and including July 23, 2019;

WHEREAS: The City of Brunswick may legitimately regulate the location and approval of warehousing and motor freight garages and truck or transfer terminals, which are principally permitted uses in the I-L Light Industrial District per Codified Ordinance Section 1266.02(b) and (i), respectively; and

WHEREAS: This Council believes that extending the temporary moratorium on the acceptance and processing of applications for zoning, occupancy and/or building permit approvals for warehousing and motor freight garages and truck or transfer terminal uses in the I-L Light Industrial District in the City, and on the issuance of such approvals, will not deny property owners economically viable use of their property and will permit the City Administration, Council and Planning Commission necessary time to undertake a review of the Brunswick Zoning Code and possible amendment thereof.

WHEREAS: THE COUNCIL OF THE CITY OF BRUNSWICK HEREBY ORDAINS:

SECTION 1: The six (6) month temporary moratorium extension established by Ordinance No. 103-18 shall be extended for a period of six (6) months up to and including

January 23, 2020, wherein the City shall not accept or process any applications for zoning, occupancy and/or building permit approvals for warehousing and motor freight garages and truck or transfer terminal uses in the I-L Light Industrial District in the City, and further shall not issue any such approvals during said period.

SECTION 2: Whenever the provisions of this Ordinance conflict with any other Ordinance or
any provision of the Codified Ordinances of the City, the provisions of this Ordinance shall control.

SECTION 3: It is found and determined that all formal actions of this Council concerning and relating to the adoption of this Ordinance were adopted in an open meeting of this Council, and that all deliberations of this Council and any of its committees that resulted in such formal action, were in meetings open to the public, in compliance with all legal requirements, including Section 121.22 of the Ohio Revised Code.

SECTION 4: This Ordinance is hereby declared to be an emergency measure necessary for the immediate preservation of the public health, safety and general welfare of the City and its residents and property owners and for the additional reason that it is required to permit the City Administration, Council and Planning Commission necessary time to undertake a review of the Brunswick Zoning Code and possible amendment thereof. Therefore, the same shall be in full force and effect from and after its passage by the required number of votes or from the earliest time allowed by law.

PASSED: 1st Reading_____

2nd Reading_____

3rd Reading_____

ADOPTED: _____ AYES _____ NAYS _____

ATTEST: _____
Clerk of Council
Fijabi Julien-Gallam, CMC

THE CITY OF BRUNSWICK

PROPOSED LEGISLATION

DATE: 7/8/2019

TO: Vice Mayor Michael Abella Jr. and Members of City Council

FROM: Carl S. DeForest, City Manager

COPY: Mayor Ron Falconi

LEGISLATION: **ORD. NO. 40-19** - An emergency ordinance extending a temporary moratorium on the acceptance and processing of applications for zoning, occupancy, conditional use and/or building permit approvals for multi-family dwelling units in all zoning districts and the issuance of such approvals. - **2nd Reading** (Committee-of-the-Whole, *Administration/Brian Ousley*)

BACKGROUND: On February 11, 2019, City Council adopted Ordinance No. 3-19 extending the temporary moratorium on the acceptance and processing of applications for zoning, occupancy, conditional use and/or building permit approvals for Multi-Family Dwelling Units in any Zoning District in the City for an additional six (6) months up to and including August 12, 2019.

PURPOSE AND EXPLANATION: Council would like to extend the temporary moratorium. The current temporary moratorium ends in August while Council is on summer break.

IMPLEMENTATION SCHEDULE: Three readings and an emergency to not have a gap between the current and the new proposed legislation.

FINANCIAL INFORMATION:

FINANCIAL SUMMARY:

RECOMMENDED ACTION:

One Reading	No
Two Readings	No
Three Readings	Yes
Emergency	Yes
Suspension of Rules	Yes

If emergency or suspension of the rules, why the request?
Requesting that this be an emergency to meet the timeline.

ADDITIONAL INFORMATION:

CITY OF BRUNSWICK, OHIO
ORDINANCE NO._____

BY:

AN EMERGENCY ORDINANCE EXTENDING A TEMPORARY MORATORIUM ON THE ACCEPTANCE AND PROCESSING OF APPLICATIONS FOR ZONING, OCCUPANCY, CONDITIONAL USE AND/OR BUILDING PERMIT APPROVALS FOR MULTI-FAMILY DWELLING UNITS IN ALL ZONING DISTRICTS AND THE ISSUANCE OF SUCH APPROVALS.

WHEREAS: The City of Brunswick may legitimately regulate the location and approval of Multi-Family Dwelling Units, as defined in Codified Ordinance Section 1242.02(32)(c);

WHEREAS: On February 12, 2018, City Council adopted Ordinance No. 9-18, establishing a six (6) month temporary moratorium on the acceptance and processing of applications for zoning, occupancy, conditional use and/or building permit approvals for Multi-Family Dwelling Units in any Zoning District in the City effective as of February 12, 2018;

WHEREAS: On July 9, 2018, City Council adopted Ordinance No. 46-18 extending the temporary moratorium on the acceptance and processing of applications for zoning, occupancy, conditional use and/or building permit approvals for Multi-Family Dwelling Units in any Zoning District in the City for an additional six (6) months up to and including February 12, 2019;

WHEREAS: On February 11, 2019, City Council adopted Ordinance No. 3-19 extending the temporary moratorium on the acceptance and processing of applications for zoning, occupancy, conditional use and/or building permit approvals for Multi-Family Dwelling Units in any Zoning District in the City for an additional six (6) months up to and including August 12, 2019; and

WHEREAS: This Council believes that extending the temporary moratorium on the acceptance and processing of applications for zoning, occupancy, conditional use and/or building permit approvals for Multi-Family Dwelling Units in any Zoning District in the City, and on the issuance of such approvals, will not deny property owners economically viable use of their property and will permit the City Administration, Council and Planning Commission necessary time to undertake a review of the Brunswick Zoning Code and possible amendment thereof relative to the location and approval process for Multi-Family Dwelling Units.

WHEREAS: THE COUNCIL OF THE CITY OF BRUNSWICK HEREBY

ORDAINS:

SECTION 1: The six (6) month temporary moratorium extension established by Ordinance No. 3-19 shall be extended for a period of six (6) months up to and including February 12, 2020, wherein the City shall not accept or process any applications for zoning, occupancy, conditional use and/or building permit approvals for Multi-Family Dwelling Units in any Zoning District in the City, and further shall not issue any such approvals during said period.

SECTION 2: Whenever the provisions of this Ordinance conflict with any other Ordinance or
any provision of the Codified Ordinances of the City, the provisions of this Ordinance shall control.

SECTION 3: It is found and determined that all formal actions of this Council concerning and relating to the adoption of this Ordinance were adopted in an open meeting of this Council, and that all deliberations of this Council and any of its committees that resulted in such formal action, were in meetings open to the public, in compliance with all legal requirements, including Section 121.22 of the Ohio Revised Code.

SECTION 4: This Ordinance is hereby declared to be an emergency measure necessary for the immediate preservation of the public health, safety and general welfare of the City and its residents and property owners and for the additional reason that it is required to permit the City Administration, Council and Planning Commission necessary time to undertake a review of the Brunswick Zoning Code and possible amendment thereof relative to the location and approval process for Multi-Family Dwelling Units. Therefore, the same shall be in full force and effect from and after its passage by the required number of votes or from the earliest time allowed by law.

PASSED: 1st Reading_____

2nd Reading_____

3rd Reading_____

ADOPTED: _____ AYES _____ NAYS _____

ATTEST: _____
Clerk of Council
Fijabi Julien-Gallam, CMC

CITY OF BRUNSWICK, OHIO
ORDINANCE NO. 40-19

BY: Committee-of-the-Whole

AN EMERGENCY ORDINANCE EXTENDING A TEMPORARY MORATORIUM ON THE ACCEPTANCE AND PROCESSING OF APPLICATIONS FOR ZONING, OCCUPANCY, CONDITIONAL USE AND/OR BUILDING PERMIT APPROVALS FOR MULTI-FAMILY DWELLING UNITS IN ALL ZONING DISTRICTS AND THE ISSUANCE OF SUCH APPROVALS.

WHEREAS: The City of Brunswick may legitimately regulate the location and approval of Multi-Family Dwelling Units, as defined in Codified Ordinance Section 1242.02(32)(c);

WHEREAS: On February 12, 2018, City Council adopted Ordinance No. 9-18, establishing a six (6) month temporary moratorium on the acceptance and processing of applications for zoning, occupancy, conditional use and/or building permit approvals for Multi-Family Dwelling Units in any Zoning District in the City effective as of February 12, 2018;

WHEREAS: On July 9, 2018, City Council adopted Ordinance No. 46-18 extending the temporary moratorium on the acceptance and processing of applications for zoning, occupancy, conditional use and/or building permit approvals for Multi-Family Dwelling Units in any Zoning District in the City for an additional six (6) months up to and including February 12, 2019;

WHEREAS: On February 11, 2019, City Council adopted Ordinance No. 3-19 extending the temporary moratorium on the acceptance and processing of applications for zoning, occupancy, conditional use and/or building permit approvals for Multi-Family Dwelling Units in any Zoning District in the City for an additional six (6) months up to and including August 12, 2019; and

WHEREAS: This Council believes that extending the temporary moratorium on the acceptance and processing of applications for zoning, occupancy, conditional use and/or building permit approvals for Multi-Family Dwelling Units in any Zoning District in the City, and on the issuance of such approvals, will not deny property owners economically viable use of their property and will permit the City Administration, Council and Planning Commission necessary time to undertake a review of the Brunswick Zoning Code and possible amendment thereof relative to the location and approval process for Multi-Family Dwelling Units.

WHEREAS: THE COUNCIL OF THE CITY OF BRUNSWICK HEREBY

ORDAINS:

SECTION 1: The six (6) month temporary moratorium extension established by Ordinance No. 3-19 shall be extended for a period of six (6) months up to and including February 12, 2020, wherein the City shall not accept or process any applications for zoning, occupancy, conditional use and/or building permit approvals for Multi-Family Dwelling Units in any Zoning District in the City, and further shall not issue any such approvals during said period.

SECTION 2: Whenever the provisions of this Ordinance conflict with any other Ordinance or
any provision of the Codified Ordinances of the City, the provisions of this Ordinance shall control.

SECTION 3: It is found and determined that all formal actions of this Council concerning and relating to the adoption of this Ordinance were adopted in an open meeting of this Council, and that all deliberations of this Council and any of its committees that resulted in such formal action, were in meetings open to the public, in compliance with all legal requirements, including Section 121.22 of the Ohio Revised Code.

SECTION 4: This Ordinance is hereby declared to be an emergency measure necessary for the immediate preservation of the public health, safety and general welfare of the City and its residents and property owners and for the additional reason that it is required to permit the City Administration, Council and Planning Commission necessary time to undertake a review of the Brunswick Zoning Code and possible amendment thereof relative to the location and approval process for Multi-Family Dwelling Units. Therefore, the same shall be in full force and effect from and after its passage by the required number of votes or from the earliest time allowed by law.

PASSED: 1st Reading_____

2nd Reading_____

3rd Reading_____

ADOPTED: _____ AYES _____ NAYS _____

ATTEST: _____
Clerk of Council
Fijabi Julien-Gallam, CMC

THE CITY OF BRUNSWICK

PROPOSED LEGISLATION

DATE: 7/8/2019

TO: Vice Mayor Michael Abella Jr. and Members of City Council

FROM: Carl S. DeForest, City Manager
Paul Barnett

COPY: Mayor Ron Falconi

LEGISLATION: **RES. NO. 46-19** - A resolution authorizing direct payment to Melway Paving Company, INC. for the city's proportionate share of the Laurel Road and South Carpenter Road Resurfacing Project. - **2nd Reading** (Services, Utilities, Technology & Cable Committee, *Administration/Paul Barnett*)

BACKGROUND: Resolution 102-18 was passed pledging cooperation with the Medina County Engineer and Brunswick Hills Township for the resurfacing of Laurel Road and South Carpenter Road in an amount not to exceed $120,000. Both of these roadways share frontage in the City of Brunswick and also Brunswick Hills Township. The Medina County Engineer prepared the bid package, bid the work, opened the bids and prepared the bid tabulation. There were five(5) bidders and Brunswick Hills entered into contract with the lowest and best bidder, Melway Paving Company. Brunswick Hills Township will oversee the construction and process paperwork. Brunswick Hills has requested that the City of Brunswick, after construction is complete and inspected, pay the contractor directly for the City of Brunswick portion of the project.

The City also anticipates needing an additional $10,000 for engineering coordination costs but will be covered under the engineering contract and is budgeted separately.

PURPOSE AND EXPLANATION: The purpose of this project is to cooperate with Brunswick Hills Township to provide a safe and smooth driving surface on two(2) roadways that both communities share responsibility for the roadway surface.

IMPLEMENTATION SCHEDULE: Construction is anticipated to begin in July, 2019.

FINANCIAL INFORMATION:

FINANCIAL SUMMARY: The estimated construction costs for the City of Brunswick's portion are not estimated to exceed $120,000. Eligible and approved costs will be paid from the City's Road Improvement Fund #333. Payment will occur after the construction is complete and the Township and contractor approve and agree on quantities. The City will work with the Township to sign off on the quality of work and will agree to the final approval of work before any payment will occur.

RECOMMENDED ACTION:

One Reading	No
Two Readings	No
Three Readings	Yes
Emergency	No
Suspension of Rules	No

If emergency or suspension of the rules, why the request?

ADDITIONAL INFORMATION:

5 bidders
rounding
~~101,724.~~

BID TAB OF QUOTES 3-21-2019 2019 BRUNSWICK HILLS TOWNSHIP ROAD BID BRUNSWICK HILLS TOWNSHIP MEDINA COUNTY, OHIO	ENGINEER'S ESTIMATE		MELWAY PAVING CO. 7571 STATE ROUTE 83 HOLMESVILLE, OHIO 44633		KOKOSING CONST. 1539 LOWELL STREET ELYRIA, OHIO 44035		KARVO PAVING CO. 4524 HUDSON DR. STOW, OHIO 44224		CROSSROADS ASPHALT 13421 HAWKE ROAD COLUMBIA STATION OHIO, 44028		BARBICAS CONST. CO. 124 DARROW RD. STE.1 AKRON, OH 44305		
DESCRIPTION	UNIT COST	TOTAL	UNIT COST	TOTAL	UNIT COST	TOTAL	UNIT COST	TOTAL	UNIT COST	TOTAL	UNIT COST	TOTAL	AVERAGE UNIT COST
PROPOSAL NO. 1 – T.H. 138 LAUREL ROAD (W.130TH TO CITY LIMITS)													
SS-1 Bit. Tack Coat @ 0.1 Gals/S.Y.	$2.94	$2,731.26	$2.00	$1,858.00	$1.97	$1,830.13	$1.90	$1,765.10	$3.00	$2,787.00	$2.50	$2,322.50	$2.27
2" County Spec (CS) Intermediate Course	$78.75	$65,047.50	$75.00	$61,950.00	$81.00	$66,906.00	$79.50	$65,667.00	$85.00	$70,210.00	$85.00	$70,210.00	$81.10
No. 9 Limestone Choke	$52.50	$2,415.00	$19.00	$874.00	$57.00	$2,622.00	$45.00	$2,070.00	$63.00	$2,898.00	$60.00	$2,760.00	$48.80
Temp. Yellow Center Line, Type 2 (CS402 Course)	$420.00	$315.00	$400.00	$300.00	$200.00	$150.00	$425.00	$318.75	$1,200.00	$900.00	$2,440.00	$1,830.00	$933.00
#8 ACBF Slag Cover Aggr.	$73.50	$6,835.50	$80.00	$7,440.00	$110.00	$10,230.00	$73.86	$6,868.98	$70.00	$6,510.00	$73.00	$6,789.00	$81.37
CRS-2 Bit. Latex Mod. Seal Coat	$2.73	$13,944.84	$2.20	$11,237.60	$2.90	$14,813.20	$2.52	$12,872.16	$2.70	$13,791.60	$2.50	$12,770.00	$2.56
2' Berming Using No.411 Limestone	$39.90	$11,172.00	$30.00	$8,400.00	$16.50	$4,620.00	$34.00	$9,520.00	$30.00	$8,400.00	$35.00	$9,800.00	$29.10
Water Based Yellow Center Line, Type 1	$844.00	$633.00	$2,560.00	$1,920.00	$1,800.00	$1,350.00	$2,545.00	$1,908.75	$1,800.00	$1,350.00	$2,500.00	$1,875.00	$2,241.00
Water Based White Edge Line, Type 1	$630.00	$951.30	$2,045.00	$3,087.95	$600.00	$906.00	$2,029.00	$3,063.79	$600.00	$906.00	$2,000.00	$3,020.00	$1,454.80
Water Based 24" White Stop Lines, Type 1	$21.00	$630.00	$11.90	$357.00	$4.00	$120.00	$28.00	$840.00	$4.00	$120.00	$10.00	$300.00	$11.58
Furnish & Install Survey Monuments	$950.00	$1,900.00	$555.00	$1,110.00	$600.00	$1,200.00	$774.12	$1,548.24	$410.00	$820.00	$600.00	$1,200.00	$587.82
Furnish & Maintain Vehicular Traffic Control	$14,340.00	$14,340.00	$3,190.00	$3,190.00	$3,120.00	$3,120.00	$5,000.00	$5,000.00	$4,630.00	$4,630.00	$6,000.00	$6,000.00	$4,388.00
Total Proposal No. 1		**$120,915.40**		**$101,724.55**		**$107,867.33**		**$111,442.77**		**$113,322.60**		**$118,876.50**	
O. 2 – T.H. 103 SOUTH CARPENTER ROAD (SLEEPY HOLLOW RD. TO LAUREL RD.)													
SS-1 Bit. Tack Coat @ 0.1 Gals/S.Y.	$2.94	$2,375.52	$2.00	$1,616.00	$1.97	$1,591.76	$2.24	$1,809.92	$3.00	$2,424.00	$2.50	$2,020.00	$2.34
2" County Spec (CS) Intermediate Course	$78.75	$56,621.25	$75.00	$53,925.00	$81.00	$58,239.00	$79.50	$57,160.50	$85.00	$61,115.00	$90.00	$64,710.00	$82.10
No. 9 Limestone Choke	$52.50	$2,100.00	$19.00	$760.00	$57.00	$2,280.00	$45.00	$1,800.00	$70.00	$2,800.00	$60.00	$2,400.00	$50.20
Temp. Yellow Center Line, Type 2 (CS402 Course)	$420.00	$277.20	$400.00	$264.00	$200.00	$132.00	$425.00	$280.50	$1,200.00	$792.00	$2,500.00	$1,650.00	$945.00
#8 ACBF Slag Cover Aggr.	$73.50	$5,953.50	$80.00	$6,480.00	$110.00	$8,910.00	$73.86	$5,982.66	$70.00	$5,670.00	$73.00	$5,913.00	$81.37
CRS-2 Bit. Latex Mod. Seal Coat	$2.73	$12,137.58	$2.20	$9,781.20	$2.90	$12,893.40	$2.52	$11,203.92	$2.70	$12,004.20	$2.50	$11,115.00	$2.56
2' Berming Using No.411 Limestone	$39.90	$9,735.60	$30.00	$7,320.00	$16.50	$4,026.00	$34.00	$8,296.00	$30.00	$7,320.00	$35.00	$8,540.00	$29.10
Water Based Yellow Center Line, Type 1	$844.00	$557.04	$2,560.00	$1,689.60	$1,800.00	$1,188.00	$2,545.00	$1,679.70	$1,800.00	$1,188.00	$2,500.00	$1,650.00	$2,241.00
Water Based White Edge Line, Type 1	$630.00	$831.60	$2,045.00	$2,699.40	$600.00	$792.00	$2,029.00	$2,678.28	$600.00	$792.00	$2,000.00	$2,640.00	$1,454.80
Furnish & Install Survey Monuments	$950.00	$950.00	$555.00	$555.00	$600.00	$600.00	$750.00	$750.00	$410.00	$410.00	$700.00	$700.00	$603.00
Furnish & Maintain Vehicular Traffic Control	$19,340.00	$19,340.00	$2,765.00	$2,765.00	$3,000.00	$3,000.00	$4,200.00	$4,200.00	$4,250.00	$4,250.00	$6,000.00	$6,000.00	$4,043.00
Total Proposal No. 2		**$110,879.29**		**$87,855.20**		**$93,652.16**		**$95,841.48**		**$98,765.20**		**$107,338.00**	
Grand Total Proposals No. 1-2		**$231,794.69**		**$189,579.75**		**$201,519.49**		**$207,284.25**		**$212,087.80**		**$226,214.50**	

EQUAL OPPORTUNITY EMPLOYER

AGREEMENT FOR COUNTY SPEC. 402 & ODOT ITEM 422

SINGLE CHIP AND SEAL WITH STIPULATED TRAFFIC CONTROL

2019 BRUNSWICK HILLS TOWNSHIP ROAD BID

This agreement made and entered into by and between the Board of Township Trustees, Brunswick Hills Township, 1918 Pearl Road, Brunswick, Ohio, 44212, hereinafter referred to as the "TOWNSHIP" and Melway Paving Company, Inc., 7571 State Route 83, Holmesville, Ohio, 44633, hereinafter referred to as the "CONTRACTOR."

WITNESSETH.

WHEREAS, the Township through the Office of the Medina County Engineer, did cause to be published in The Gazette, a newspaper of general circulation in Medina County, Ohio, on March 1, 2019, its Notice to Bidders inviting sealed bids for County Spec. 402 and ODOT Item 422 single chip and seal with stipulated traffic control; and

WHEREAS, in conformity with said Notice to Bidders, the Contractor did submit its bid to the Township; and

WHEREAS, by proper entry in its journal, the Township determined that the bid of the Contractor to be the lowest and best bid received, and did thereafter award the contract to the Contractor.

NOW, THEREFORE, in consideration of the mutual covenants contained herein the parties do agree as follows:

1. The Contractor agrees to furnish all specified materials, equipment, necessary labor and traffic control to perform all work required to complete the complete County Spec. 402 and ODOT Item 422 Single Chip and Seal with stipulated traffic control, according to Township specifications for the original bid sum of $189,579.75. Actual payment up to said maximum is to be an aggregate total determined by the work actually performed by the Contractor.

2. All work to be performed and all materials furnished by the Contractor shall be in reasonably close conformity with the lines, grades, cross-sections, dimensions, and material requirements shown on the plans or indicated in the specifications.

In the event the Medina County Engineer finds the materials or finished product in which the materials are used not within reasonably close conformity with the plans and specifications, but that reasonably acceptable work has been produced, the Township shall then make a determination if the work shall be accepted and remain in place. In this event the Township will document the basis of acceptance by contract modification which will provide for an appropriate adjustment in the contract price for such work or materials as the County Engineer deems necessary to conform to his determination, based on engineering judgement.

In the event the Medina County Engineer finds the materials or the finished product in which the materials are used or the work performed are not in reasonable conformity with the plans and specifications and have resulted in an inferior or unsatisfactory product, the work or materials shall be removed and replaced or otherwise corrected by, and at the expense of, the Contractor.

3. The Contractor will be responsible for initiating, maintaining and supervising all safety precautions and programs in connection with the work. He will take all necessary precautions for the safety of, and will provide the necessary protection to prevent damage, injury or loss to all employees from the work and other persons who may be affected thereby.

4. The Contractor will comply with all applicable laws, ordinances, rules,regulations and order of any public body having jurisdiction. He will erect and maintain as required by the conditions and progress of the work, all necessary safeguards for safety and protection.

5. The Contractor will supervise and direct the work. He will be solely responsible for the means, methods, techniques, sequences and procedures of construction.

6. The Contractor shall furnish, install and maintain all necessary barricades, construction signs, and other traffic control devices in accordance with the Manual of Uniform Traffic Control Devices. The Contractor shall take all necessary precautions for the protection of the work and the safety of the public.

7. The Contractor shall furnish flaggers, appropriately equipped and instructed, when required, to regulate the flow of vehicular traffic around and through the work.

8. Final payment made to the Contractor for work performed under this agreement shall be made within thirty (30) days from the date of completion or acceptance, whichever is later, by the Township. Acceptance by the Township may require a finding by the County Engineer that the project as completed has met all Township requirements.

9. Partial payments for work performed shall be made monthly at the rate of ninety-two percent (92%) of estimates prepared by the Contractor and approved by the Medina County Engineer. All labor performed after the job is fifty percent (50%) completed, shall be paid at one hundred percent (100%) of the estimates submitted by the Contractor and approved by the Medina County Engineer.

10. From the date the contract is fifty percent (50%) completed, as evidenced by payments in the amount of at least fifty percent (50%) of the contract, the retainage shall be deposited in the escrow account as set forth in paragraph 16.

11. When the major portion of the project is substantially completed and occupied or

in use, or otherwise accepted, and there exists no other reason to withhold retainage, the retained percentage held in connection with such project, shall be released from escrow and paid to the Contractor, withholding only that amount necessary to assure completion. Funds in the escrow account not heretofore paid, with accumulated interest, shall be paid to the Contractor thirty (30) days from the date of completion or acceptance by the Township.

12. Partial payment not to exceed ninety percent (90%) shall be allowed upon the written authorization of the County Engineer, upon such conditions as he prescribes, for material delivered safely in the vicinity of the project.

13. Contractor agrees that no subcontractor shall be utilized for work under this contract unless first approved in writing by the Township, who agrees such approval shall not unreasonably be withheld.

14. Any subcontractor employed under this agreement shall be required to comply with the completion date set forth herein, and his failure to so comply shall subject the Contractor to the penalty provided in paragraph 23 of this agreement.

15. The parties hereto designate the following bank or savings and loan association to act as escrow agent for the Contractor per Section 153.63 of the Ohio Revised Code, _____

_____.

16. Any money which is due the Contractor, shall be paid the Contractor on the date due, or if disputed, shall be deposited in such escrow account, along with all retainage after the contract is fifty percent (50%) completed.

17. The money so deposited shall be placed in a savings account, or the escrow agent shall properly invest all of the escrow principal in obligations selected by the escrow agent and approved by the Contractor and the Township, in writing.

18. The escrow agent designated herein, shall hold the escrow principal and income

until receipt of notice from the Township and the Contractor, or until receipt of an arbitration order specifying the amount of the escrow principal to be released and the person to whom it is to be released. Upon receipt of the notice or order, the agent shall promptly pay such amount of principal and proportionate amount of the escrow income to the person indicated.

19. The escrow shall be compensated for its services as agreed to by the Township and the Contractor from the income from the escrow account.

20. When the parties disagree as to the conditions under which money is to be paid, the parties shall apply for a decision by arbitration under the procedures of Chapter 2711 of the Ohio Revised Code. When application is made, neither party shall initiate and no court shall permit the maintenance of, an action in court for decision of the same issue sought to be determined in the arbitration. The award made by the arbitrator may include the cost of arbitration. The arbitration shall be binding on all parties.

21. If the money required to be paid, or deposited under the escrow provisions of this section is not paid to the Contractor, or deposited with an escrow agent, the Township shall pay the Contractor an amount equal to eight percent (8%) annual interest compounded daily.

22. The Contractor agrees to complete all work by September 13, 2019. If the work is not completed by the time herein fixed, the Township or it's agent shall thereafter keep an accurate account of all expenditures for inspection, supervision and all other similar technical services incurred in connection with the work after the expiration of the time fixed. The amount thereof shall be retained out of any sums due or to become due to the Contractor.

23. In addition, the parties agree that the Contractor shall pay liquidated damages to Brunswick Hills Township at the rate stated in State of Ohio Department of Transportation, "Construction and Material Specifications," 2016 Edition, Item 108.07, $400.00 per calendar day, to recover damages for delay only, for each day of delay not approved by the Township.

24. If, in the opinion of the Township, the Contractor has not commenced his work within a reasonable time, does not carry such work forward with reasonable progress, is improperly performing his work, or has abandoned or failed to complete the contract, the Township shall make a finding to the effect, and enter such finding on its journal, and so notify the Contractor, in writing, and the right of the Contractor to control and supervise the work shall immediately cease.

25. In such instance, the Township shall forthwith give written notice to the sureties on any bond of the Contractor of such action. If, within ten (10) days after receipt of such notice, such sureties or one or more of them notify the Township, in writing, of their intentions to enter upon and complete the work covered by such contract, such sureties shall be permitted to do so, and the Township shall allow them twenty (20) days after the receipt of such notice in writing from such sureties within which to enter upon the work and resume construction, unless the time is extended by the Township upon good cause shown.

26. If, after receiving notice of the action of the Township in terminating the contract of the Contractor over the work covered by this contract, the sureties on such Contractor's bond do not within ten (10) days give the Township the written notice provided for in this section, or having done so, fail to carry such work forward with reasonable progress or improperly perform, abandon, or fail to complete the work by such contract, the Township shall complete the work. The Township shall first advertise the work for letting as provided by law and the estimated cost at which the work shall be let shall be the difference between the original contract price and the amount paid to original Contractor, and a contract shall not be let at a price in excess of the amended estimate.

If no bids to complete the work are received, the Township shall cause that part of the work still uncompleted to be re-estimated, shall re-advertise it at the amended estimate and shall

not let the work for more than such re-estimate. If the estimated cost of completing the contract does not exceed FIFTEEN THOUSAND DOLLARS per mile, the Township may contract without bid, or complete by force account as set forth in the Ohio Revised Code.

27. Contractor agrees that in the hiring of employees for the performance of work under this contract, it shall pay the minimum wage in accordance with the Schedule of Prevailing Wage Rates ascertained and determined by the Ohio Department of Commerce, Division of Labor and Worker Safety, as applicable to Medina County, Ohio, in compliance with Section 4115.07 of the Ohio Revised Code.

28. Contractor further agrees to require in any subcontract granted for performance of any work required under this contract, compliance by the subcontractor with the minimum wage set forth in the Schedule of Prevailing Hourly Wage Rates ascertained and determined by the Ohio Department of Commerce, Division of Labor and Worker Safety, as applicable to Medina County, Ohio, in compliance with Section 4115.07 of the Ohio Revised Code.

29. Contractor agrees to provide Worker's Compensation coverage on all employees utilized on this job, or to see that such coverage is provided by any subcontractor utilized. Contractor further agrees to hold the Township harmless and to indemnify and defend the Township of Brunswick Hills, its trustees, officers, employees and agents against any claim for damages arising against them as a result of failure to provide such coverage.

30. Contractor further agrees in order to protect itself as well as the Township of Brunswick Hills under this agreement, that it shall provide to the Township upon request, proof of the coverage required herein.

31. Contractor still further agrees that in the hiring of employees for the performance of work under this contract, or any subcontract, that neither the Contractor, nor any subcontractor hired by him, or any person acting on their behalf, shall by reason of race, creed, sex, handicap,

color or military status as defined in Section 4112.01 of the Revised Code, discriminate against any citizen of the State in the employment of laborers and workers who are qualified and available to perform the work for which this contract relates; and further, neither the Contractor, nor any subcontractor employed by him, or any person on their behalf, shall in any manner, discriminate against, or intimidate any employee hired for the performance of work under this contract or any subcontract, on account of race, creed, sex, handicap, color or military status as defined in Section 4112.01 of the Revised Code.

32. Contractor agrees that there shall be deducted from the amount payable hereunder by the Township a forfeiture of TWENTY-FIVE DOLLARS for each person who is discriminated against or intimidated in violation of this contract; and that for any second or subsequent violation, this contract shall be canceled or terminated by the Township, and all money to become due hereunder may be forfeited.

33. The Contractor will indemnify and hold harmless the Township of Brunswick Hills, its trustees and the County Engineer and their agents and employees from and against all claims, damages, losses and expenses, including attorney fees arising out of or resulting from the performance of the work, provided that any such claims, damage, loss or expense is attributed to bodily injury, sickness, disease or death, or to injury to or destruction of tangible property including the loss of use resulting therefrom; and is caused in whole or in part by any negligent or willful act or omission of the Contractor or sub-contractor, anyone directly or indirectly employed by any of them or anyone for whose acts any of them may be liable.

The Contractor shall be fully responsible to the owner for the acts and omissions of his sub-contractors and of persons either directly or indirectly employed by them, as he is for the acts and omissions of persons directly employed by him.

34. Contractor further agrees that in order to protect himself, as well as the Township

of Brunswick Hills under the indemnity agreement provision hereinabove set forth, that the Contractor will, at all times during the term of this agreement, have and keep in force a general liability insurance policy in the amount of not less than ONE MILLION DOLLARS property damage, and ONE MILLION DOLLARS bodily injury; which policy shall name Brunswick Hills Township, the Brunswick Hills Township Trustees and Medina County Engineer as additional insureds, and provide a minimum of ten (10) days' notice to all insureds prior to cancellation.

35. Contractor has provided a Certificate of Insurance to the Township in compliance with the above terms, and agrees it shall not be canceled or materially changed without having in effect another policy to meet the above terms of paragraph 34 and without giving prior notice thereof to the Township.

36. It is still further agreed by and between the parties that no assignment, or transfer of this contract, or any part thereof, or any monies due, or to become due hereunder, shall be made by the Contractor without the written consent of the Township, but except as aforsaid, this contract shall be binding upon and shall inure to the benefit of the successors and assigns of the parties.

37. If a certified check, cashier's check or letter of credit was utilized in bidding, upon execution of this contract and execution of a performance bond in the sum of one hundred percent (100%) of the bid, said certified check, cashier's check or letter of credit shall be refunded.

38. The parties agree that the provisions of this contract are governed by the laws of the State of Ohio and that in any instance of conflict between the language of this contract and the language of the Ohio Revised Code, that said sections and chapters of the Ohio Revised Code shall prevail.

39. The parties still further agree that the following documents attached hereto shall be incorporated herein, and made a part of this contact as if fully rewritten:

Notice of Bid

Instructions to Bidders

Supplemental Specifications for County Spec. 402 and ODOT Item 422 Single Chip and Seal with Stipulated Traffic Control

Engineer's Estimate

Form of Bid Guarantee/Performance Bond

Statement of Bidder Resources and Experience

Non-Collusion Affidavit

Contractor's Indemnification Clause

Prevailing Wage Rate Schedules

Certificate of Liability Insurance

Personal Property Tax Verification Affidavit

Contractor's Bid Form

State of Ohio, Equal Opportunity Division, Certificate of Compliance

In addition, any changes therefrom shall be in an addendum, in writing, signed by the parties setting forth specifically the sum to be paid as a result of such change order.

IN WITNESS WHEREOF, the parties have caused this Agreement to be executed in triplicate

this 11 day of June, 2019.

Dated:

BOARD OF TOWNSHIP TRUSTEES
BRUNSWICK HILLS TOWNSHIP, OHIO

Michael Esber

Christina Kusnerak

John Witthuhn

CONTRACTOR:

COMPANY:
Melway Paving Company, Inc.

Signed by:

Printed name: Steve Schlabach

Title: President

Dated:

May 22, 2019

Approved as to form and legality:
S. FORREST THOMPSON
MEDINA COUNTY PROSECUTOR

Brian Richter
Assistant County Prosecutor 6/29/19

BOND ACCEPTANCE

The attached bond and power of attorney of Westfield Insurance Co. as surety is hereby accepted as being good and sufficient this 11 day of June, 2019.

BOARD OF TRUSTEES
BRUNSWICK HILLS TOWNSHIP, OHIO

Michael Esber

Christina Kusnerak

John Witthuhn

CERTIFICATE OF FISCAL OFFICER

I HEREBY CERTIFY that the money required to meet the foregoing contract, agreement or obligation has been lawfully appropriated, or authorized, or directed for such purpose, and is in the Township Treasury or in the process of collection, to the credit of 2031 Fund, free from any outstanding obligation.

Katherine Esber, Township Fiscal Officer
Brunswick Hills Township Board of Trustees

Dated at Brunswick, Ohio, June 11, 2019.

CERTIFICATE OF PROSECUTING ATTORNEY

I hereby approve to form the foregoing contract and bond.

S. Forrest Thompson
Medina County Prosecutor
By: 4/29/19
Brian Richter
Assistant County Prosecutor

Brunswick Hills Township
1918 Pearl Road
Brunswick, Ohio 44212

June 20, 2019

City of Brunswick
4095 Center Road
Brunswick, Ohio 44212

Attn: Paul E. Barnett
RE: Asphalt Resurfacing of Laurel Road and South Carpenter Road

Dear Mr. Barnett;

We are happy to work with the City to provide both your citizens and our citizens a smooth and safe driving surface through this resurfacing project. As provided to you earlier are the completed bid and completed agreement with Melway Paving Company, low bidder, for the resurfacing of the above captioned roadways. The City passed resolution 102-18 committing to cooperate on this project. We are in agreement with your request to split the costs for this work per the front property footage percentages as follows:

South Carpenter Road from Laurel to Sleepy Hollow: 24.1% City and 75.9% Township
Laurel Road from South Carpenter to West 130th Street: 62.9% City and 37.1% Township

We will be providing construction inspection for the project at our cost. Our intent is to provide final quantities at the end of construction showing the total cost to the contractor for each roadway separately along with the percentage of City share. We are requesting that the City share of the payment be made directly to Melway Paving.

Thank you for your consideration. We look forward to partnering with you now and in the future.

Sincerely,

Paul Magovac
Service Department Foreman
Brunswick Hills

2019 BRUNSWICK HILLS TOWNSHIP ROAD BID
FOR
COUNTY SPEC. 402 INTERMEDIATE ASPHALT COURSE &
ODOT ITEM 422 SINGLE CHIP & SEAL
WITH STIPULATED TRAFFIC CONTROL

In
Brunswick Hills Township
Medina County, Ohio

by the

Brunswick Hills Township Board of Trustees

Submitting Company: Melway Paving Co., Inc.

Signed: _____

Company Title: Steve Schlabach
President

Address: 7571 State Route 83

Holmesville OH 44633

Telephone: (330) 279-9000

Fax: (330) 279-9002

E-mail: estimating@melwaypaving.com

Board of Brunswick Hills Township Trustees:

Michael Esber
Christina Kusnerak
John Witthuhn

NOTICE OF BID

Bids are requested for County Spec. 402 Intermediate Asphalt Course & ODOT Item 422 Single Chip & Seal with stipulated Traffic Control on 1.41 mile of roads in Brunswick Hills Township, Medina County, Ohio.

Bid forms and specifications can be obtained daily by calling the Brunswick Hills Administration Building at 330-220-8182 between the hours of 8:00 a.m. and 3:00 p.m., Monday through Friday at a cost of $10.00. Electronic copies of the bid documents can be obtained free of charge from the Medina County Engineer web page at www.highwayengineer.co.medina.oh.us .

All bids will be accepted no later than March 21, 2019 at 1:30 P.M. at the Office of the Medina County Engineer, 791 West Smith Road, Medina, Ohio 44256 at which time all properly-filed bids will be publicly opened and read aloud.

All bids must be filed on forms provided by the Township and submitted in a sealed envelope clearly marked "2019 Brunswick Hills Township Road Bid" prior to the time and date set forth above.

The Engineer's Estimate is **$ 231,794.69**. All resurfacing shall be completed by September 13th, 2019.

Each bidder shall be required to file a bid guaranty with the bid in the form of either: (1) a Bid/Performance Bond in the amount of one-hundred percent (100%) of the amount bid; or (2) a Certified Check, Cashier's Check or Letter of Credit shall equal to 10% of the amount bid, conditioned that the bidder shall, if his bid is accepted, execute a contract in conformity with the bid, plans, details, specifications and bills of material. A Letter of Credit shall be revocable only at the option of the Township.

Additional documents that must be submitted with the bid are specified in the "Instruction to Bidders" portion of the bid documents.

All contractors and subcontractors involved with the project will, to the extent practicable, use Ohio products, materials, services, and labor in the implementation of their project. Additionally, contract compliance with the Equal Opportunity requirements of Ohio Administrative Code Chapter 123, the Governor's Executive Order of 1972, and the Governor's Executive Order 84-9 shall be required.

Bidders must comply with Prevailing Wage Rates on public improvements in Medina County, Ohio as determined by the Ohio Department of Commerce, Division of Labor and Worker Safety.

The bid will be awarded to the lowest and best bidder.

NOTICE OF BID (CONT'D.)

The Brunswick Hills Township Trustees reserve the right to reject any and all bids.

Brunswick Hills Township Board of Trustees

Michael Esber
Christina Kusnerak
John Witthuhn

Medina County Gazette

March 1st, 2019

INSTRUCTIONS TO BIDDERS

2019 BRUNSWICK HILLS TOWNSHIP ROAD BID
FOR
COUNTY SPEC. 402 INTERMEDIATE ASPHALT COURSE &
ODOT ITEM 422 SINGLE CHIP & SEAL
WITH STIPULATED TRAFFIC CONTROL

SECTION I.

Bid Proposals shall be addressed to the Board of Brunswick Hills Township Trustees.

Bids shall be enclosed in a sealed envelope marked **"2019 BRUNSWICK HILLS TOWNSHIP ROAD BID"** and shall bear the name of the bidder. All bids will be opened at the time and place stated in the "Notice of Bid."

No Bidder may withdraw his bid for a period of sixty (60) days after the date of bid opening, except as provided in Section 9.31 or Division (G) of Section 153.54 of the Ohio Revised Code. If it is not accepted within such period, such bid may be withdrawn without prejudice.

Each Bid shall contain the documents listed below in the following order:

1. Notice of Bid
2. Instructions to Bidders
3. Bid Guarantee/Performance Bond, **(Exhibit A)**
4. Statement of Bidder Resources and Experience, **(Exhibit B)**
5. Non-Collusion Affidavit, **(Exhibit C)**
6. Personal Property Tax Verification Affidavit, **(Exhibit D)**
7. Independent Contractor Indemnification Clause, **(Exhibit E)**
8. A State of Ohio, Equal Opportunity Division, Certificate of Compliance
9. Engineer's Estimate, (Summarized)
10. Bid Statement and Summation
11. Contractor's Bid Blank(s)
12. Supplemental Specifications
13. Prevailing Wage Rate Schedule

Submitted Bids must include the following completed documents:

1. Bid Guarantee/Performance Bond, **(Exhibit A)**
2. Statement of Bidder Resources and Experience, **(Exhibit B)**
3. Non-Collusion Affidavit, **(Exhibit C)**
4. Personal Property Tax Verification Affidavit, **(Exhibit D)**
5. Independent Contractor Indemnification Clause, **(Exhibit E)**
6. A State of Ohio, Equal Opportunity Division, Certificate of Compliance
7. Bid Statement and Summation
8. Contractor's Bid Blank(s)

SECTION II.

Each bidder shall satisfy the Board of Brunswick Hills Township Trustees by reference to work which he has performed, and by the equipment he utilizes, that he is fully competent to properly execute the work required by these specifications by the stipulated completion date, **(See Exhibit B)**.

SECTION III.

Bids shall be submitted using the attached blank forms, designed for such purpose. These forms must be completed intact, without removal of any part, must recite the full name of the party making the Bid, and must be properly signed.

In each blank marked "unit price", bidders are required to provide a Bid price per referenced unit for the requested materials, labor, or equipment, or referenced combination thereof. Failure to provide a price for each unit price item, or failure to provide prices for lump sum items, will render the Bid informal, allowing its rejection at the Township's discretion.

Extended unit prices are calculated by multiplying the bidder's unit price entries times their respective approximate quantities. The resultant extended unit price figures, in addition to any lump sum prices, are added to calculate the amount of each Bid.

The sum of the extended unit prices and lump sum prices provided by each Bidder shall comprise that Bidder's Bid price for consideration of award of contract. If an error is made in the extension of the unit prices, or in the addition of the unit and lump sum prices, the accurate extended unit prices and total shall govern.

Quantities provided by the Bid Documents are estimates only. The Township reserves the right to eliminate, increase, or decrease the actual quantity of any unit price item, or to non-perform any lump sum item. Sections 104.01D and 104.01E of the CMS will be excluded from use in this project.

SECTION IV.

Bidders must carefully examine the Bid Documents and perform a reasonable site investigation before submitting a Bid. Submission of a Bid is an affirmative statement that the Bidder has investigated the Project site and is satisfied as to the character, quality, quantities, and conditions to be encountered in performing the Work. A reasonable site investigation includes investigating the Project site and all other locations related to the performance of the Work.

SECTION V.

Each Bid shall be accompanied by a bid guarantee, in the form of a Bid/Performance Bond, a Certified Check, a Cashier's Check, or a Letter of Credit, in conformity with the requirements of Sections 153.54 and 153.571 (B) of the Ohio Revised Code. If A Bid/Performance Bond (Exhibit A) is used, the Bond shall be in the full amount of the bid

and signed by a Surety company authorized to do business in the State of Ohio, and accompanied by the Surety's sufficient power of attorney affirming said signature. If a Certified Check, Cashier's Check, or Letter of Credit is used, the instrument shall be drawn on a solvent bank in an amount not less than ten percent (10%) of the Bid. A letter of credit shall be revocable only at the option of the Township. The bid guarantee shall be given as security that, if the Bid is accepted, the Bidder will enter into a contract in conformity with the Bid, plans, details, specifications and bills of material.

All bid guarantees shall be made payable to the order of the **BRUNSWICK HILLS TOWNSHIP BOARD OF TRUSTEES, MEDINA COUNTY, OHIO.** Should a bid be rejected, the bid guarantee submitted in the form of a Certified Check, Cashier's Check, or Letter of Credit will be returned immediately upon the awarding of the contract, or decision to reject all bids. If a ten percent (10%) bid guarantee is used, the successful bidder will be required to submit a one-hundred percent (100%) performance bond as set forth in Exhibit A within ten (10) days of written notice of acceptance of his bid.

If for any reason, other than as authorized by Section 9.31 of the Ohio Revised Code or Division (G) of Section 153.54, the bidder to whom the contract shall have been awarded shall refuse or neglect within ten (10) days after due notice that the contract has been awarded to them to execute the same and furnish security in the amount required, the bidder, or its surety, shall be liable to the Township for the difference between the previously accepted bid, and that of the next lowest bidder, or a penal sum not to exceed ten percent (10%) of the grand total bid, whichever is less. If the Township rebids the project, a sum not to exceed ten percent (10%) of the grand total bid, or the costs in connection with the resubmission of, printing new contract documents, required advertising and printing, and mailing notices to prospective bidders, whichever is less.

Copies of the bid and bid guarantee shall be endorsed with the name of the bidder, and filed in the same envelope. Bonds or letters of credit must also be endorsed by the surety or sureties. Names of endorsers shall also be typed immediately below the signatures.

SECTION VI.

The Contractor shall guarantee all materials and work performed for a period of two (2) years from the date of completion. The Contractor warrants and guarantees for a period of two years from the date of completion of the project that all items performed are free from defects due to faulty materials or workmanship and the Contractor shall promptly make such corrections as may be necessary by reason of such defects including the repairs of any damage to other parts of the project resulting from such defects. The County will give notice of observed defects with reasonable promptness. In the event that the Contractor should fail to make such repairs, adjustments, or other work that may be necessary by such defects, the County may do so and charge the Contractor the costs thereby incurred. The Maintenance Bond shall remain in full force and effect through the guarantee period. Said Bond shall be supplied at completion of the project and after passage of the final inspection for a two (2) year period in the amount of ten percent (10%) of the construction cost, specifying the **Board of Brunswick Hills Township Trustees** and the **Board of Medina County**

Commissioners as the protected parties.

SECTION VII.

Securities Approval:

The Board of Brunswick Hills Township Trustees shall determine the sufficiency of all securities. All bonds filed pursuant to this bid offer shall be issued by a surety company authorized to conduct business in this state as surety, approved by the Board of Brunswick Hills Township Trustees.

SECTION VIII.

Minimum Wages:

Wages to be paid to all labor employees on this contract shall be in accordance with the Ohio Department of Commerce, Division of Labor and Worker Safety. Bidders are cautioned to assure the completeness of said wage schedules, and to notify the Township prior to the bid date of any omitted schedules.

The Contractor agrees to provide the Township with full and complete documentation of payment of prevailing wages to all employees of the Contractor and of its subcontractors governed by Prevailing Wage law.

The Contractor further agrees to stay informed of applicable prevailing wage rates and to immediately inform all its subcontractors and the Township of such changes. The Contractor agrees to defend and indemnify the Township, its elected officials, agents and employees, against all claims, actions, demands, judgments, settlements, damages, liabilities, losses, and costs of any kind, including, but not limited to, reasonable fees of attorneys and experts, arising from or related to the Contractor's failure to inform its subcontractors of changes in prevailing wage rates.

SECTION IX.

Other Costs and Requirements:

Bids must include all costs of furnishing labor, materials, equipment, supervision, coordination, and all other things necessary for the full and complete performance of the project and all costs of fulfilling the requirements of laws, rules, and regulations pertaining thereto. The following is a partial list of ancillary contract costs and requirements. Said list is provided for the convenience of Bidders, to assist in their inclusion of all components of costs and fulfillment of all requirements, though this list does not recite all such costs and requirements.

1. Bids must include the cost of all required bonds.

2. Bids must include the cost to procure all permits and licenses, to pay all charges, fees and taxes, and to provide all notices necessary and incidental to the due and lawful prosecution of the Work.

3. Bids must include the cost of insurance coverage of the type and at least in the amounts set forth in the specifications and bid provisions.

4. Brunswick Hills Township is exempt from all sales, excise, and transportation taxes, with the exception of State of Ohio motor fuel tax. Bid prices shall exclude all such taxes.

SECTION X.

Liability:

The Contractor shall comply with all provisions of the laws and rules of the Ohio Bureau of Workers' Compensation covering all operations under the Contract whether performed by the Contractor or its subcontractor. Contractor will agree to provide workers' compensation coverage on all employees utilized under this Agreement, as required by Ohio law, or to see that such coverage is provided by any subcontractor utilized. Contractor further will agree to hold the Township harmless and indemnify and defend the Township's trustees, officers, employees, and agents against any claim for damages raised against them as a result of Contractor's failure to provide or assure such coverage.

The Contractor shall provide general liability insurance while work is in progress and during the time the contract is in effect. The amount of coverage shall be a Minimum of **ONE MILLION DOLLARS** ($1,000,000) **property damage** and **ONE MILLION DOLLARS** ($1,000,000) **bodily injury**.

The Contractor shall provide comprehensive automobile liability insurance for all owned, non-owned, and hired vehicles. The amount of coverage for each occurrence shall be a Minimum of **ONE MILLION DOLLARS** ($1,000,000) **property damage** and **ONE MILLION DOLLARS** ($1,000,000) **bodily injury**.

A Certificate of Liability Insurance must be submitted to the Brunswick Hills Township Trustees and made an attachment to the successful bid prior to the execution of the contract agreement. Said Certificate of Liability Insurance shall name **Brunswick Hills Township**, the **Brunswick Hills Township Trustees**, and **The Medina County Engineer** as additional insureds.

The Contractor shall be liable for all amounts including that in excess of the insurance, if any, and the Contractor shall agree, in writing, to hold the Township harmless from all claims of damages resulting from the work undertaken.

Should Contractor's policy of liability insurance be canceled or subject to reduction of coverage, Contractor will immediately notify the Township of such cancellation or reduction and shall use its best efforts to obtain the level of coverage required by this Contract. The inability of Contractor to obtain such replacement coverage may warrant the immediate suspension of this contract, at the sole discretion of the Township.

SECTION XI.

Personal Property Taxes:

Brunswick Hills Township, prior to entering into a formal contract with the successful bidder will receive from the contractor, a signed affidavit stating their personal property tax liability to Medina County. This form shall be included in this package, **(Exhibit D)** .

SECTION XII.

Factors for Acceptance or Rejection of Bids:

1. Pursuant to Ohio Revised Code 5575.01 and 5575.02, a contract shall be awarded to the lowest and best Bid.

2. Any Bid which is incomplete, conditional, obscure, or which contains additions not called for or irregularities of any kind, may be rejected.

3. The Township reserves the right to reject any and all Bids, and also the right to waive any informality in the Bid. The Township has the right to postpone the decision to award a contract for up to forty-five (45) days.

4. No contract shall be awarded to any person, firm, or corporation that is in arrears or is in default to the Township upon any debt or contract, or that is in default as surety or otherwise upon any obligation to the Township, or that has an unresolved finding of recovery with the State Auditor, or has been debarred by the Township or Medina County from consideration for contract awards.

SECTION XIII.

Precautions:

All Bidders should take the following precautions in preparing his bid:

1. Sign and fill out each proposal completely. Only bid documents filled out with permanent marking instruments (i.e., pen or typewriter) will be considered in awarding of the contract. Bid documents totals and signatures completed with pencil will not be read or accepted.

2. Make sure the bid guarantee is properly executed and signed.

3. Where a guaranteed bond is utilized, make sure it is properly executed and signed by both the surety and the bidder, with the names of the parties signing typed immediately below their signatures; affix any corporate seal.

4. Make sure that the agent of the surety bonding company can furnish on demand.
   a. credentials showing his power of attorney.
   b. certificate showing the legal right of the company to conduct business in the State of Ohio.

SECTION XIV.

Interpretations of Bidding Documents:

Bidders shall promptly notify the County Engineer through Dan Becker, Project Engineer, (330) 723-9655, of any ambiguity, inconsistency or error which he may discover upon examination of the bidding documents. Bidders requiring clarification or interpretation of the bidding documents shall make a written request to the Township, prior to the date of bid opening.

Any written interpretation, correction or change of the bidding documents will be made by addendum. Interpretations, corrections or changes of the bidding document made in any other manner will not be binding, and the bidders shall not rely upon such interpretations, corrections and changes.

SECTION XV.

Payment:

The successful contractor will bill Brunswick Hills Township for the items (or proposals) included in this bid.

Retainage requirements as detailed in the contract shall be followed in order to process invoices.

Invoices shall itemize actual quantities of materials used (by proposal) in the same form as the Contractor's Bid Blank.

Completed invoices will be addressed to the Brunswick Hills Township Board of Trustees and sent directly to the Township Fiscal Officer.

Approved invoices will be forwarded to the Township Trustees for payment.

The Township will remit payment of approved invoices directly to the Contractor within 45 days of the date that the invoice is received by the Township.

INVOICE: BRUNSWICK HILLS TOWNSHIP BOARD OF TRUSTEES

MAIL COMPLETED INVOICES AND CORRELATED DOCUMENTATION, I.E. TICKETS, AFFIDAVITS, PAYROLL RECORDS, ETC. TO:

Katherine Esber, Brunswick Hills Township Fiscal Officer
1918 Pearl Rd.
Brunswick Hills, Ohio 44212

Keith Faber
Ohio Auditor

Certified Search for Unresolved Findings for Recovery

OHIO AUDITOR OF STATE
KEITH FABER

Office of Auditor of State
88 East Broad Street
Post Office Box 1140
Columbus, OH 43216-1140

(614) 466-4514
(800) 282-0370

Auditor of State - Unresolved Findings for Recovery Certified Search

I have searched The Auditor of State's unresolved findings for recovery database using the following criteria:

Contractor's Information:

Name: **Schlabach, Steve**
Organization: **Melway Paving Company Inc.**
Date: **3/27/2019 3:27:22 PM**

This search produced the following list of **61** possible matches:

Name/Organization	Address
Bocook, Steve	
Connell, Steve	8851 Cedar Hills Road
Crockett, Steve	3280 Morse Rd., Suite 214
Ellison, Steven	1832 Wynnwood Lane
Freeman, Steven	213 W Como Ave
Johnson, Steven	1110 East Main Street, Apartment 611
Johnson, Steven	4027 Shaker Road
Rogers, Steven	159 Virginia Avenue
Setzer, Steve	13 Honeysuckle Lane
Steed, Steve	1825 Connecticut Avenue SE
Bischof, Ronald	3227 Rustic Valley Drive
Donald, Sterling K	6303 Meyers Dr
Fischbach, Justin G.	26986 Glenside Lane
Haddix, Stella	
Harmony Community School,	
Harmony Community School, c/o Buckeye Community Hope Foundation,	3021 East Dubl Granville Road
Harmony Community School, c/o Buckeye Community Hope Foundation,	3021 East Dublin Granville Rd.
Harmony Community School, c/o Buckeye Community Hope Foundation,	3021 East Dublin Granville Road
Harmony Community School, c/o Buckeye Community Hope Foundation,	3021 East Dublin-Granville Rd.
Harmony Community School, c/o Buckeye Community Hope Foundation,	3021 East Dublin Granville Rd
Harte Crossroads High School,	350 Columbus City Center Drive
Harte Crossroads Public Schools	350 Columbus City Center Drive
Institute of Charter School Management and Resources,	368 South Patterson Boulevard
Jones, Stephanie	96 Bilvead Road

Name/Organization	Address
Jones, Stephen Todd	16605-J Redcliff Drive
Travelers Casualty and Surety Company of America	304 N. 2nd Street
Liberty Local School District,	4115 Shady Road
Millard, Stephanie	2120 Kemper Lane, Apartment 1
Ohio Farmer's Insurance Company	2120 Kemper Lane Apartment 1
Ohio Farmers Insurance Company	2120 Kemper Lane, Apt. 1
Ohio Farmers Insurance Company	2120 Kemper Lane Apt. 1
Ohio Farmers Insurance Company	2120 Kemper Lane, Apartment 1
Ohio Farmers Insurance Company	2120 Kemper Lane, Apt. 1
Ohio Farmers Insurance Company (Westfield Group)	2120 Kemper Lane, Apartment 1
Phipps, Stephanie	3572 B Big Run Road
Rauschenbach, Timothy	315 Hopewell Drive
Rhea Academy Community School,	
Rheinfrank, Stephanie	345 Delaware Dr
Venice Group, Inc.	1565 Integrity Drive E.
Schaeffer, Herman	
Schaeffer, Joyce	
Schaffter, David	417 Main Street
Schaffter, David	908 Hidden Valley Drive
Travelers Casualty and Surety Company of America	41200 Ravens Edge Way
Schmidt, Creston	1278 Vicki
Schneider, David	20088 Center Ridge Road
The Hanover Insurance Group, Inc	20088 Center Ridge Road
The Hanover Insurance Group, Inc.	20088 Center Ridge Road
Scholarts Preparatory and Career Center for Children,	PO Box 360895
Schweikert, Mark	109 Conreh Drive
Sites, Stephen	204 Lane Street
Sites, Stephen	3702 Christopher Pl
Sites, Stephen	3702 Christopher Place
Sites, Stephen	845 Marion Pike
Harris Computer ACE Charter School Services	845 Marion Pike
Hartford Fire Insurance Company,	845 Marion Pike
Starks, Jr., Chester	11470 Euclid Ave. #170
Starks, Jr., Chester	11470 Euclid Avenue #170
The Harte School,	350 Columbus City Center Drive
The International Preparatory School	1301 East 9th Street, Suite 1900
Theodore Roosevelt Public Community School,	c/o Richland Academy 75 North Walnut Street

The above list represents possible matches for the search criteria you entered. Please note that pursuant to ORC 9.24, only the person (which includes an organization) actually named in the finding for recovery is prohibited from being awarded a contract.

If the person you are searching for appears on this list, it means that the person has one or more findings for recovery and is prohibited from being awarded a contract described in ORC 9.24, unless one of the exceptions in that section apply.

If the person you are searching for does not appear on this list, an initialed copy of this page can serve as documentation of your compliance with ORC 9.24(E).

Please note that pursuant to ORC 9.24, it is the responsibility of the public office to verify that a person to whom it plans to award a contract does not appear in the Auditor of State's database. The Auditor of State's office is not responsible for inaccurate search results caused by user error or other circumstances beyond the Auditor of State's control.

Keith Faber
Ohio Auditor

Certified Search for Unresolved Findings for Recovery

OHIO AUDITOR OF STATE
KEITH FABER

Office of Auditor of State
88 East Broad Street
Post Office Box 1140
Columbus, OH 43216-1140

(614) 466-4514
(800) 282-0370

Auditor of State - Unresolved Findings for Recovery Certified Search

I have searched The Auditor of State's unresolved findings for recovery database using the following criteria:

Contractor's Information:

Name: **Schlabach, Steve**
Organization:
Date: **3/27/2019 3:27:45 PM**

This search produced the following list of **61** possible matches:

Name/Organization	Address
Bocook, Steve	
Connell, Steve	8851 Cedar Hills Road
Crockett, Steve	3280 Morse Rd., Suite 214
Ellison, Steven	1832 Wynnwood Lane
Freeman, Steven	213 W Como Ave
Johnson, Steven	1110 East Main Street, Apartment 611
Johnson, Steven	4027 Shaker Road
Rogers, Steven	159 Virginia Avenue
Setzer, Steve	13 Honeysuckle Lane
Steed, Steve	1825 Connecticut Avenue SE
Bischof, Ronald	3227 Rustic Valley Drive
Donald, Sterling K	6303 Meyers Dr.
Fischbach, Justin G.	26986 Glenside Lane
Haddix, Stella	
Harmony Community School,	
Harmony Community School, c/o Buckeye Community Hope Foundation,	3021 East Dublin Granville Road
Harmony Community School, c/o Buckeye Community Hope Foundation,	3021 East Dublin Granville Rd.
Harmony Community School, c/o Buckeye Community Hope Foundation,	3021 East Dublin Granville Road
Harmony Community School, c/o Buckeye Community Hope Foundation,	3021 East Dublin-Granville Rd.
Harmony Community School, c/o Buckeye Community Hope Foundation,	3021 East Dublin Granville Rd.
Harte Crossroads High School,	350 Columbus City Center Drive
Harte Crossroads Public Schools,	350 Columbus City Center Drive
Institute of Charter School Management and Resources,	368 South Patterson Boulevard
Jones, Stephanie	95 B Mead Road

Name/Organization	Address
Jones, Stephen Todd	16605-J Redcliff Drive
Travelers Casualty and Surety Company of America	304 N. 2nd Street
Liberty Local School District,	4115 Shady Road
Millard, Stephanie	2120 Kemper Lane, Apartment 1
Ohio Farmer's Insurance Company	2120 Kemper Lane Apartment 1
Ohio Farmers Insurance Company	2120 Kemper Lane, Apt. 1
Ohio Farmers Insurance Company	2120 Kemper Lane Apt. 1
Ohio Farmers Insurance Company	2120 Kemper Lane, Apartment 1
Ohio Farmers Insurance Company	2120 Kemper Lane, Apt. 1
Ohio Farmers Insurance Company (Westfield Group)	2120 Kemper Lane, Apartment 1
Phipps, Stephanie	3572 B Big Run Road
Rauschenbach, Timothy	315 Hopewell Drive
Rhea Academy Community School,	
Rheinfrank, Stephanie	345 Delaware Dr
Venice Group, Inc.	1565 Integrity Drive E.
Schaeffer, Herman	
Schaeffer, Joyce	
Schaffter, David	417 Main Street
Schaffter, David	908 Hidden Valley Drive
Travelers Casualty and Surety Company of America	41200 Ravens Edge Way
Schmidt, Creston	1278 Vicki
Schneider, David	20088 Center Ridge Road
The Hanover Insurance Group, Inc	20088 Center Ridge Road
The Hanover Insurance Group, Inc	20088 Center Ridge Road
Scholarts Preparatory and Career Center for Children,	PO Box 360895
Schweikert, Mark	109 Conren Drive
Sites, Stephen	204 Lane Street
Sites, Stephen	3702 Christopher Pl
Sites, Stephen	3702 Christopher Place
Sites, Stephen	845 Marion Pike
Harris Computer ACE Charter School Services	845 Marion Pike
Hartford Fire Insurance Company	845 Marion Pike
Starks, Jr., Chester	11470 Euclid Ave. #170
Starks, Jr., Chester	11470 Euclid Avenue #170
The Harte School,	350 Columbus City Center Drive
The International Preparatory School	1301 East 9th Street, Suite 1900
Theodore Roosevelt Public Community School,	c/o Richland Academy 75 North Walnut Street

The above list represents possible matches for the search criteria you entered. Please note that pursuant to ORC 9.24, only the person (which includes an organization) actually named in the finding for recovery is prohibited from being awarded a contract.

If the person you are searching for appears on this list, it means that the person has one or more findings for recovery and is prohibited from being awarded a contract described in ORC 9.24, unless one of the exceptions in that section apply.

If the person you are searching for does not appear on this list, an initialed copy of this page can serve as documentation of your compliance with ORC 9.24(E).

Please note that pursuant to ORC 9.24, it is the responsibility of the public office to verify that a person to whom it plans to award a contract does not appear in the Auditor of State's database. The Auditor of State's office is not responsible for inaccurate search results caused by user error or other circumstances beyond the Auditor of State's control.

[EXHIBIT A]

2019 BRUNSWICK HILLS TOWNSHIP ROAD BID

MEDINA COUNTY, OHIO

FORM OF BID GUARANTEE / PERFORMANCE BOND

"KNOW ALL MEN BY THESE PRESENTS, that we, the undersigned

Melway Paving Company, Inc. as principal

and Ohio Farmers Insurance Company as sureties,

are hereby held and bound unto **Brunswick Hills Township Trustees** as obligee in the penal sum of the Dollar Amount of the bid submitted by the principal to the obligee on

March 21, 2019 to undertake the project known as **The 2019 Brunswick Hills Township Road Bid**. The penal sum referred to herein shall be the Dollar Amount of the principal's bid to the obligee, incorporating any additive or deductive alternate proposals made by the obligee. In no case shall the penal sum exceed the amount of _____ DOLLARS. (If the foregoing blank is not filled in, the penal sum will be the full amount of the principal's bid, including alternates. Alternatively, if the blank is filled in, the amount stated must not be less than the full amount of the bid including alternates, in dollars and cents. A percentage is not acceptable.) For the payment of the penal sum well and truly to be made, we hereby jointly and severally bind ourselves, our heirs, executors, administrators, successors, and assigns.

Signed this 12th day of March, 20 19.

THE CONDITION OF THE ABOVE OBLIGATION IS SUCH, that whereas the above-named principal has submitted a bid for The 2019 Brunswick Hills Township Road Bid.

NOW, THEREFORE, if the obligee accepts the bid of the principal and the principal fails to enter into a proper contract in accordance with the bid, plans, details, specifications, and bills of material; and in the event the principal pays to the obligee the difference not to exceed ten percent (10%) of the penalty hereof between the amount specified in the bid and such larger amount for which the obligee may in good faith contract with the next lowest bidder to perform the work covered by the bid; or in the event the obligee does not award the contract to the next lowest bidder and resubmits the project for

bidding, the principal pays to the obligee the difference not to exceed ten percent (10%) of the penalty hereof between the amount specified in the bid, or the costs, in

[EXHIBIT A] – Cont'd

connection with the resubmission of, printing new contract documents, required advertising, and printing and mailing notices to prospective bidders, whichever is less, then this obligation shall be null and void, otherwise to remain in full force and effect; if the obligee accepts the bid of the principal and the principal within ten (10) days after the awarding of the contract enters into a proper contract in accordance with the bid, plans, details, specifications, and bills of material, which said contract is made a part of this bond the same as though set forth herein;

Now, also, if the said Melway Paving Company, Inc.

shall well and faithfully do and perform the things agreed by

The Brunswick Hills Township Trustees of Brunswick Hills Twp., Medina County, Ohio to

be done and performed according to terms of said contract; and shall pay all lawful claims of subcontractors, material, men, and laborers, for labor performed and materials furnished in the carrying forward, performing, or completing of said contract; we agreeing and assenting that this undertaking shall be for the benefit of any material men or laborer having a just claim, as well as for the obligee herein; then this obligation shall be void; otherwise, the same shall remain in full force and effect; it being expressly understood and agreed that the liability of the surety for any and all claims hereunder shall in no event exceed the penal sum amount of this obligation as herein stated.

The said surety hereby stipulates and agrees that no modifications, omissions, or additions, in or to the terms of the said contract or in or to the plans or specifications therefore shall in any wise affect the obligations of said surety on its bond.

Melway Paving Company, Inc.
(Contractor)

By: _____

Ohio Farmers Insurance Company
(Surety)

One Park Circle, PO Box 5001
(Address of Surety)

Westfield Center, OH 44251

By: Lillian Kauffman, Attorney-in-Fact

Attest: Lillian Kauffman

Hummel Group, Inc.
PO Box 250, Berlin, OH 44610

(Address of Agent)

THIS POWER OF ATTORNEY SUPERCEDES ANY PREVIOUS POWER BEARING THIS SAME POWER # AND ISSUED PRIOR TO 02/14/19, FOR ANY PERSON OR PERSONS NAMED BELOW.

POWER NO. **3401722 04**

General Power of Attorney

CERTIFIED COPY

Westfield Insurance Co.
Westfield National Insurance Co.
Ohio Farmers Insurance Co.

Westfield Center, Ohio

Know All Men by These Presents, That WESTFIELD INSURANCE COMPANY, WESTFIELD NATIONAL INSURANCE COMPANY and OHIO FARMERS INSURANCE COMPANY, corporations, hereinafter referred to individually as a "Company" and collectively as "Companies," duly organized and existing under the laws of the State of Ohio, and having its principal office in Westfield Center, Medina County, Ohio, do by these presents make, constitute and appoint
DAVID COIL, LILLIAN KAUFFMAN, THOMAS YODER, KARA D. SCHROCK, JASON LEE TROYER, JOINTLY OR SEVERALLY

of **BERLIN** and State of **OH** its true and lawful Attorney(s)-in-Fact, with full power and authority hereby conferred in its name, place and stead, to execute, acknowledge and deliver **any and all bonds, recognizances, undertakings, or other instruments or contracts of suretyship**- -.

<u>LIMITATION:</u> THIS POWER OF ATTORNEY CANNOT BE USED TO EXECUTE NOTE GUARANTEE, MORTGAGE DEFICIENCY, MORTGAGE GUARANTEE, OR BANK DEPOSITORY BONDS.

and to bind any of the Companies thereby as fully and to the same extent as if such bonds were signed by the President, sealed with the corporate seal of the applicable Company and duly attested by its Secretary, hereby ratifying and confirming all that the said Attorney(s)-in-Fact may do in the premises. Said appointment is made under and by authority of the following resolution adopted by the Board of Directors of each of the WESTFIELD INSURANCE COMPANY, WESTFIELD NATIONAL INSURANCE COMPANY and OHIO FARMERS INSURANCE COMPANY:

"*Be It Resolved,* that the President, any Senior Executive, any Secretary or any Fidelity & Surety Operations Executive or other Executive shall be and is hereby vested with full power and authority to appoint any one or more suitable persons as Attorney(s)-in-Fact to represent and act for and on behalf of the Company subject to the following provisions:

The Attorney-in-Fact. may be given full power and authority for and in the name of and on behalf of the Company, to execute, acknowledge and deliver, any and all bonds, recognizances, contracts, agreements of indemnity and other conditional or obligatory undertakings and any and all notices and documents canceling or terminating the Company's liability thereunder, and any such instruments so executed by any such Attorney-in-Fact shall be as binding upon the Company as if signed by the President and sealed and attested by the Corporate Secretary."

"*Be it Further Resolved,* that the signature of any such designated person and the seal of the Company heretofore or hereafter affixed to any power of attorney or any certificate relating thereto by facsimile, and any power of attorney or certificate bearing facsimile signatures or facsimile seal shall be valid and binding upon the Company with respect to any bond or undertaking to which it is attached." (Each adopted at a meeting held on February 8, 2000).

In Witness Whereof, WESTFIELD INSURANCE COMPANY, WESTFIELD NATIONAL INSURANCE COMPANY and OHIO FARMERS INSURANCE COMPANY have caused these presents to be signed by their **National Surety Leader and Senior Executive** and their corporate seals to be hereto affixed this **14th** day of **FEBRUARY** A.D., **2019** .

Corporate Seals Affixed

WESTFIELD INSURANCE COMPANY SEAL — WESTFIELD NATIONAL INSURANCE CO. SEAL — OHIO FARMERS INSURANCE COMPANY CHARTERED 1848

WESTFIELD INSURANCE COMPANY
WESTFIELD NATIONAL INSURANCE COMPANY
OHIO FARMERS INSURANCE COMPANY

By: Dennis P. Baus

Dennis P. Baus, *National Surety Leader and Senior Executive*

State of Ohio
County of Medina ss.:

On this **14th** day of **FEBRUARY** A.D., **2019** , before me personally came **Dennis P. Baus** to me known, who, being by me duly sworn, did depose and say, that he resides in **Wooster, Ohio;** that he is **National Surety Leader and Senior Executive** of WESTFIELD INSURANCE COMPANY, WESTFIELD NATIONAL INSURANCE COMPANY and OHIO FARMERS INSURANCE COMPANY, the companies described in and which executed the above instrument; that he knows the seals of said Companies; that the seals affixed to said instrument are such corporate seals; that they were so affixed by order of the Boards of Directors of said Companies; and that he signed his name thereto by like order.

Notarial Seal Affixed

NOTARIAL SEAL — STATE OF OHIO

David A. Kotnik

David A. Kotnik, Attorney at Law, *Notary Public*
My Commission Does Not Expire (Sec. 147.03 Ohio Revised Code)

State of Ohio
County of Medina ss.:

I, **Frank A. Carrino,** Secretary of WESTFIELD INSURANCE COMPANY, WESTFIELD NATIONAL INSURANCE COMPANY and OHIO FARMERS INSURANCE COMPANY, do hereby certify that the above and foregoing is a true and correct copy of a Power of Attorney, executed by said Companies, which is still in full force and effect; and furthermore, the resolutions of the Boards of Directors, set out in the Power of Attorney are in full force and effect.

In Witness Whereof, I have hereunto set my hand and affixed the seals of said Companies at Westfield Center, Ohio, this 12th day of March A.D., 2019

WESTFIELD INSURANCE COMPANY SEAL — WESTFIELD NATIONAL INSURANCE CO. SEAL — OHIO FARMERS INSURANCE COMPANY CHARTERED 1848

Frank A Carrino Secretary

Frank A. Carrino, *Secretary*

Financial Statement

December 31, 2018

Ohio Farmers Insurance Co.
Westfield Center, Ohio 44251-5001

OHIO FARMERS INSURANCE COMPANY
BALANCE SHEET

12/31/18
(in thousands)

Assets	
Cash, cash equivalents, and short term investments	57,706
Bonds	456,847
Stocks	137,628
Subsidiaries	1,977,203
Real estate	130,031
Premiums receivable	117,431
Other assets	142,647
Total assets	3,019,493
Liabilities	
Reserve for unearned premiums	171,785
Reserve for unpaid losses and loss expenses	335,594
Reserve for taxes and other liabilities	234,715
Total liabilities	742,094
Surplus	
Surplus to policyholders	2,277,399
Total surplus	2,277,399
Total liabilities and surplus	3,019,493

State of Ohio
ss:
County of Medina

The undersigned, being duly sworn, says: That he is National Surety Leader - Surety Operations of Ohio Farmers Insurance Company, Westfield Center, Ohio; that said Company is a corporation duly organized, existing and engaged in business as a Surety Company by virtue of the Laws of the State of Ohio and authorized to do business in the State of .....Ohio..... and has duly complied with all the requirements of the laws of said State applicable to said Company and is duly qualified to act as Surety under such laws; that said Company has also complied with and is duly qualified to act as Surety under the Act of Congress approved July 1947, 6 U.S.C. sec. 6-13; and that to the best of his knowledge and belief the above statement is a full, true, and correct statement of the financial condition of the said Company on the 31st day of December, 2018.

Attest:

Frank Carrino
.....
Frank A. Carrino
Group Legal Leader, Secretary

Dennis P. Baus
.....
Dennis P. Baus
National Surety Leader
Senior Executive

Sworn to before me this 13th day of February A.D. 2019.

David A. Kotnik
.....
David A. Kotnik
Attorney at Law
Notary Public – State of Ohio

My Commission Does Not Expire
Sec. 147.03 Ohio Revised Code

BD5402 B

Office of Risk Assessment
50 West Town Street
Third Floor - Suite 300
Columbus,Ohio 43215
(614)644-2658
Fax(614)644-3256
www.insurance.ohio.gov

Ohio Department of Insurance

John R. Kasich - Governor

Jillian Froment - Director

Certificate of Compliance

Issued 06/28/2018
Effective 07/01/2018
Expires 06/30/2019

I, Jillian Froment, hereby certify that I am the Director of Insurance in the State of Ohio and have supervision of insurance business in said State and as such I hereby certify that

OHIO FARMERS INSURANCE COMPANY

of Ohio is duly organized under the laws of this State and is authorized to transact the business of insurance under the following section(s) of the Ohio Revised Code:

Section 3929.01 (A)

Accident & Health
Aircraft
Allied Lines
Boiler & Machinery
Burglary & Theft
Collectively Renewable A & H
Commercial Auto - Liability
Commercial Auto - No Fault
Commercial Auto - Physical Damage
Credit Accident & Health
Earthquake
Fidelity
Financial Guaranty
Fire
Glass
Group Accident & Health
Guaranteed Renewable A & H
Inland Marine
Medical Malpractice
Multiple Peril - Commercial
Multiple Peril - Farmowners
Multiple Peril - Homeowners
Noncancellable A & H
Nonrenew-Stated Reasons (A&H)
Ocean Marine
Other Accident only
Other Liability
Private Passenger Auto - Liability
Private Passenger Auto - No Fault
Private Passenger Auto - Physical Damage
Surety
Workers Compensation

OHIO FARMERS INSURANCE COMPANY certified in its annual statement to this Department as of December 31,2017 that it has admitted assets in the amount of $3,107,895,303, liabilities in the amount of $773,381,320, and surplus of at least $2,334,513,983.

IN WITNESS WHEREOF, I have hereunto subscribed my name and caused my seal to be affixed at Columbus, Ohio, this day and date.

Jillian Froment, Director

ACORD®

CERTIFICATE OF LIABILITY INSURANCE

DATE (MM/DD/YYYY): 4/1/2019

THIS CERTIFICATE IS ISSUED AS A MATTER OF INFORMATION ONLY AND CONFERS NO RIGHTS UPON THE CERTIFICATE HOLDER. THIS CERTIFICATE DOES NOT AFFIRMATIVELY OR NEGATIVELY AMEND, EXTEND OR ALTER THE COVERAGE AFFORDED BY THE POLICIES BELOW. THIS CERTIFICATE OF INSURANCE DOES NOT CONSTITUTE A CONTRACT BETWEEN THE ISSUING INSURER(S), AUTHORIZED REPRESENTATIVE OR PRODUCER, AND THE CERTIFICATE HOLDER.

IMPORTANT: If the certificate holder is an ADDITIONAL INSURED, the policy(ies) must be endorsed. If SUBROGATION IS WAIVED, subject to the terms and conditions of the policy, certain policies may require an endorsement. A statement on this certificate does not confer rights to the certificate holder in lieu of such endorsement(s).

PRODUCER
Hummel Group, Inc.
4585 State Route 39
PO Box 250
Berlin OH 44610

CONTACT NAME: Kara Schrock
PHONE (A/C, No, Ext): (330)893-2600 FAX (A/C, No): (330)893-3339
E-MAIL ADDRESS: kschrock@hummelgrp.com

INSURER(S) AFFORDING COVERAGE	NAIC #
INSURER A: Westfield Insurance Company	24112
INSURER B:	
INSURER C:	
INSURER D:	
INSURER E:	
INSURER F:	

INSURED Melway Paving Co., Inc.
Holmes Supply Corporation
S & S Transport, Inc. dba Melway Service Corp.
7571 State Route 83
Holmesville OH 44633

COVERAGES CERTIFICATE NUMBER: 2019-2020 REVISION NUMBER:

THIS IS TO CERTIFY THAT THE POLICIES OF INSURANCE LISTED BELOW HAVE BEEN ISSUED TO THE INSURED NAMED ABOVE FOR THE POLICY PERIOD INDICATED. NOTWITHSTANDING ANY REQUIREMENT, TERM OR CONDITION OF ANY CONTRACT OR OTHER DOCUMENT WITH RESPECT TO WHICH THIS CERTIFICATE MAY BE ISSUED OR MAY PERTAIN, THE INSURANCE AFFORDED BY THE POLICIES DESCRIBED HEREIN IS SUBJECT TO ALL THE TERMS, EXCLUSIONS AND CONDITIONS OF SUCH POLICIES. LIMITS SHOWN MAY HAVE BEEN REDUCED BY PAID CLAIMS.

INSR LTR	TYPE OF INSURANCE	ADDL INSD	SUBR WVD	POLICY NUMBER	POLICY EFF (MM/DD/YYYY)	POLICY EXP (MM/DD/YYYY)	LIMITS		
A	X COMMERCIAL GENERAL LIABILITY CLAIMS-MADE X OCCUR GEN'L AGGREGATE LIMIT APPLIES PER: POLICY X PRO-JECT LOC OTHER:	X		TRA3556797	2/1/2019	2/1/2020	EACH OCCURRENCE	$	1,000,000
							DAMAGE TO RENTED PREMISES (Ea occurrence)	$	500,000
							MED EXP (Any one person)	$	10,000
							PERSONAL & ADV INJURY	$	1,000,000
							GENERAL AGGREGATE	$	2,000,000
							PRODUCTS - COMP/OP AGG	$	2,000,000
							Employee Benefits	$	1,000,000
A	AUTOMOBILE LIABILITY X ANY AUTO ALL OWNED AUTOS SCHEDULED AUTOS HIRED AUTOS NON-OWNED AUTOS			TRA3556797	2/1/2019	2/1/2020	COMBINED SINGLE LIMIT (Ea accident)	$	1,000,000
							BODILY INJURY (Per person)	$	
							BODILY INJURY (Per accident)	$	
							PROPERTY DAMAGE (Per accident)	$	
							Medical payments	$	5,000
A	X UMBRELLA LIAB X OCCUR EXCESS LIAB CLAIMS-MADE DED X RETENTION $ 0			TRA3556797	2/1/2019	2/1/2020	EACH OCCURRENCE	$	10,000,000
							AGGREGATE	$	10,000,000
								$	
A	~~WORKERS COMPENSATION~~ EMPLOYERS' LIABILITY ANY PROPRIETOR/PARTNER/EXECUTIVE OFFICER/MEMBER EXCLUDED? (Mandatory in NH) Y/N N If yes, describe under DESCRIPTION OF OPERATIONS below	N/A		TRA3556797 (Employers Liab. Only)	2/1/2019	2/1/2020	PER STATUTE X OTH-ER		
							E.L. EACH ACCIDENT	$	1,000,000
							E.L. DISEASE - EA EMPLOYEE	$	1,000,000
							E.L. DISEASE - POLICY LIMIT	$	1,000,000
A	Hired Auto Physical Damage Coverage			TRA3556797	2/1/2019	2/1/2020	Comprehensive Ded - $1,000 Collision Ded - $1,000		ACV

DESCRIPTION OF OPERATIONS / LOCATIONS / VEHICLES (ACORD 101, Additional Remarks Schedule, may be attached if more space is required)

Project: 2019 Brunswick Hills Township Road Bid.

Brunswick Hills, Brunswick Hills Board of Trustees, and the Medina County Engineers are an additional insured if required by written contract or agreement, subject to the general liability blanket additional insured endorsement included on this policy. Cancellation clause applicable is 10 day notice of cancellation.

CERTIFICATE HOLDER

Brunswick Hills Township Board of Trustee
Medina County
1918 Pearl Road
Brunswick, OH 44212

CANCELLATION

SHOULD ANY OF THE ABOVE DESCRIBED POLICIES BE CANCELLED BEFORE THE EXPIRATION DATE THEREOF, NOTICE WILL BE DELIVERED IN ACCORDANCE WITH THE POLICY PROVISIONS.

AUTHORIZED REPRESENTATIVE

D Coil CIC, FLMI/KSCH

© 1988-2014 ACORD CORPORATION. All rights reserved.

The ACORD name and logo are registered marks of ACORD

OHIO DEPARTMENT OF TRANSPORTATION

Home (/s/) Search... Login

ODOT
Pre-Qualified Contractors

Enter Contractor to search on

Melway

Toggle Work Types all

Select Work Types

- ✓ 1. Clearing and Grubbing
- ✓ 2. Building Removal
- 3. Gas, Oil, Water Well Abandonments
- ✓ 4. Roadway Excavation and Embankment Construction
- 5. Major Roadway Excavation
- ✓ 6. Incidental Grading
- ✓ 7. Soil Stabilization
- ✓ 8. Temporary Soil Erosion & Sediment Control
- ✓ 9. Aggregate Bases
- ✓ 10. Flexible Paving
- ✓ 11. Apply Bituminous Treatments
- 12. Rigid Paving
- ✓ 13. Pavement Planing, Milling, Scarification
- 14. Concrete Texturing
- ✓ 15. Sawing
- ✓ 16. Flexible Replacement
- 17. Rigid Pavement Replacement
- 18. Pavement Rubblizing, Breaking, Pulverizing
- ✓ 19. Structure Removal
- 20. Level 1 Bridge
- 21. Level 2 Bridge
- 22. Level 3 Bridge
- 23. Reinforcing Steel
- 24. Structural Steel Erection
- 25. Stud Welding
- 26. Structural Steel Painting

ACCOUNT NAME	VENDOR ID	ADDRESS	APP EXP DATE	WORK TYPES
MELWAY PAVING CO INC	111305002	7571 ST RT 83 HOLMESVILLE OH, 44633 330-279-9000	2019-08-31	1. Clearing and Grubbing 2. Building Removal 4. Roadway Excavation and Embankment Construction 6. Incidental Grading 7. Soil Stabilization 8. Temporary Soil Erosion & Sediment Control 9. Aggregate Bases 10. Flexible Paving 11. Apply Bituminous Treatments 13. Pavement Planing, Milling, Scarification 15. Sawing 16. Flexible Replacement 19. Structure Removal 35. Drainage (culvert, misc.) 38. Miscellaneous Concrete 39. Maintenance of Traffic 40. Waterproofing 46. Landscaping 47. Mowing 48. Trucking

Ohio | Bureau of Workers' Compensation

30 W. Spring St.
Columbus, OH 43215

Certificate of Ohio Workers' Compensation

This certifies that the employer listed below participates in the Ohio State Insurance Fund as required by law. Therefore, the employer is entitled to the rights and benefits of the fund for the period specified. This certificate is only valid if premiums and assessments, including installments, are paid by the applicable due date. To verify coverage, visit www.bwc.ohio.gov, or call 1-800-644-6292.

This certificate must be conspicuously posted.

Policy number and employer
00748325

MELWAY PAVING COMPANY INC
7571 STATE ROUTE 83
HOLMESVILLE, OH 44633-9633

Period Specified Below
07/01/2018 to 07/01/2019

www.bwc.ohio.gov
Issued by: BWC

Administrator/CEO

You can reproduce this certificate as needed.

Ohio Bureau of Workers' Compensation

Required Posting

Effective Oct. 13, 2004, Section 4123.54 of the Ohio Revised Code requires notice of rebuttable presumption. Rebuttable presumption means an employee may dispute or prove untrue the presumption (or belief) that alcohol or a controlled substance not prescribed by the employee's physician is the proximate cause (main reason) of the work-related injury.

The burden of proof is on the employee to prove the presence of alcohol or a controlled substance was not the proximate cause of the work-related injury. An employee who tests positive or refuses to submit to chemical testing may be disqualified for compensation and benefits under the Workers' Compensation Act.

Ohio | Bureau of Workers' Compensation

You must post this language with the Certificate of Ohio Workers' Compensation.

In Compliance

CERTIFICATION OF COMPLIANCE

Melway Paving Co., Inc.
7571 State Route 83
Holmesville,OH 44633

Effective Dates: 02/07/2019 through 08/06/2019

The Equal Opportunity Division of the Ohio Department of Administrative Services (Division) hereby issues Melway Paving Co., Inc. a Certificate of Compliance. The Certificate shall be in force for 180 days from the date of issuance.

Section 9.47 of the Revised Code requires the Division to review affirmative action programs and plans of each company desiring to participate on state-assisted construction contracts and determine whether that company has violated any affirmative action programs and goals for which that company was obligated to meet during the preceding five years. Based on the above-referenced review, the Division has found no such violation(s).

Please be advised that for Melway Paving Co., Inc. to maintain certification status, Melway Paving Co., Inc. must continue to ensure equal employment opportunities in accordance with applicable State and Federal EEO laws, rules, regulations and guidelines, and meet those contractual obligations for which Melway Paving Co., Inc. has agreed.

Todd McGonigle
Acting Deputy Director
State EEO Coordinator

[EXHIBIT B]

THE 2019 BRUNSWICK HILLS TOWNSHIP ROAD BID

MEDINA COUNTY, OHIO

STATEMENT OF BIDDER RESOURCES AND EXPERIENCE

The Bidder, in order to secure consideration of his Bid, will here submit a statement of work performed similar to that to be done under this proposed contract. He will further mention the larger items of his equipment and organization. He is further invited to submit evidence of his financial ability to perform the work by the stipulated completion date(s).

See attached

Project and Work	Owner's Representative and Phone Number	Engineer or Architect Rep Name and Phone Number	Contract Amount	Completion Date
ODOT 170540 SR 39, Holmes Co Resurfacing	ODOT, District 11, Chuck Sweeny 330-260-2017	ODOT, District 11, Jerred Giauque, 330-308-3996	$ 1,804,741.51	07-2018
Medina Co-Greenwich Rd	Medina Co Commissioners,144 N Broadway, Medina OH 44256 330-723-3641	Andy Conrad, PE, PS 330-723-9559	$ 1,849,928.65	10-2018
Holmes Co Sales Tax Project-Paving	Holmes County Commissioners, 330-674-0286	Holmes County Engineer, Chris Young, 330-674-1856	$ 2,730,552.11	09-2018
Stark Co-422 Resurfacing	Stark Co Commissioners 330-451-7371	Stark Co Engineer, Patrick Marx 330-477-6781	$ 758,992.82	08-2018
Summit County 405 Resurfacing	Summit County Engineer, 538 E South St, Akron OH 44311 330-643-2850	Alan Brubaker, PE, PS 330-643-2850	$ 1,911,063.75	07-2017
Stark County-422 Resurfacing	Stark Co Commissioners 330-451-7371	Stark Co Engineer, Patrick Marx 330-477-6781	$ 548,215.56	09-2017
Holmes County Road Paving Project	Holmes County Commissioners, 330-674-0286	Holmes County Engineer, Chris Young, 330-674-1856	$ 2,363,188.61	09-2017
ODOT 170093 Holmes Co	ODOT, District 11, JD Marlatt , 330-260-0648	ODOT, District 11, Todd Moore, 330--339-6633	$ 1,564,909.74	06-2017
Holmes County -Chip & Seal	Holmes County Commissioners, 330-674-0286	Holmes County Engineer, Chris Young, 330-674-1856	$ 895,081.05	08-2016
Stark County-422 Resurfacing	Stark Co Commissioners 330-451-7371	Stark Co Engineer, Patrick Marx 330-477-6781	$ 607,450.00	09-2016
Medina County-405 Resurfacing	Medina County Commissioners 330-723-3641	Medina County Engineer, Bill Viovode 330-764.8780	$ 863,094.00	09-2016
Holmes County Trail Buggy/Bike Path Phase 1 and 4 Repair Project	Holmes County Park District, 1 Trail Drive, Suite B Millersburg OH 44654	Linn Engineering Inc., 534 Market St, Zanesville OH 43701 740-452-7434	$ 280,238.06	09-2015
Summit County-405 Resurfacing	Summit County Engineer, 538 E South St, Akron OH 44311 330-643-2850	Alan Brubaker, PE, PS 330-643-2850	$ 1,022,669.50	09-2015
Ohio Dept of Transportation-Ashland	ODOT-District 3, 906 Clark Ave, Ashland OH 44805 419-281-0513	Robert Weaver, PE, PS 419-207-7155	$ 896,167.40	09-2015
Stark County-422 Resurfacing	Stark Co Commissioners 330-451-7371	Stark Co Engineer, Patrick Marx 330-477-6781	$ 626,097.20	08-2015
Medina County-405/422 Resurfacing	Medina Co Commissioners,144 N Broadway, Medina OH 44256 330-723-3641	Andy Conrad, PE, PS 330-723-9559	$ 2,438,389.20	08-2015
ODOT Project 14-0381 Hol US 62	ODOT, District 11, JD Marlatt, 330-260-0648	ODOT, District 11, Todd Moore, 330-339-6633	$ 3,001,005.45	12-2014
Stark County H-3 2014 Cold Mix Project	Stark County Commissioners 330-451-7371	Stark Co Engineer, Patrick Marx 330-477-6781	$ 786,547.62	09-2014
Medina County 405 & 422 Project	Medina County Commissioners 330-723-3641	Medina County Engineer, Bill Viovode 330-764-8780	$ 1,456,667.16	09-2014
Holmes County Road 77 Resurfacing Phase II	Holmes County Commissioners, 330-674-0286	Holmes County Engineer, Chris Young, 330-674-1856	$ 232,718.95	09-2013
ODOT Project 13-8020, Resurfacing Rt 39	ODOT, District 11, JD Marlatt, 330-260-0648	ODOT, District 11, JD Marlatt, 330-260-0648	$ 4,043,318.20	10-2013
Holmes County Road 77 Resurfacing Phase III	Holmes County Commissioners, 330-674-0286	Holmes County Engineer, Chris Young, 330-674-1856	$ 232,631.50	09-2013

Equipment

OP	
431	82 Babcock-Allot Paver
433	88 Blaw-Knox RoadWidner
440	02 Roadtec Paver
442	Barber-Green BG200 Paver
443	05 Roadtec Paver
444	00 Blaw-Knox RoadWidner
445	02 CedarRapids Trnsfr Mach
446	86 Midland Paver
447	01 Midland Paver
449	16 Paver
451	16 Carlson Paver
452	Midland Road Widner SPR6
652	73 Galion Grader
658	88 Allatt Grader
669	Allet 200G Motor Grader
676	98 Wirtgen Pavement Prof.
681	07 Terex/CMI Pulverizer
682	98 Champion 750A Grader
683	06 Bomag MPH122-2 Reclaimer
685	08 Wirtgen Reclaimer
687	CAT 304E Mini Hoe
690	2014 Cat Grader 12M2
691	Noram Grader 65E2
915	99 Cat 966G Loader
923	John Deer Loader
938	Dozer

OR	
547	89 Bomag BW120AD Roller
548	Dresser Roller w/Ropps
549	Dresser Roller w/Ropps
550	Galion Trench Roller
551	91 Bomag 120AD1 Roller
553	90 Dynapac CS15 Roller
554	91 Hyster C530A Rt Roller
559	01 Bomag BW120AD-3 Rllr
560	06 Bomag BW120AD-4 Rllr
561	Hypac C530AH Rt Roller
562	06 Cat CS563E Pad Foot Rllr
564	10 Bomag BW11RH Rt Rllr
565	00 Hypac 9 Wheel Roller
566	Bomag BW211D-40
567	15 Bomag BW120AD-4 Rllr
568	01 Bomag Roller
569	Cat CB54 Roller
570	14 Bomag Roller
663	95 Case 1845C Skid Steer
665	99 Case 1845C Skid Steer
672	01 Cat 236 Skid Steer
675	02 Cat 236 Skid Steer
678	08 Cat 256C Skid Steer
680	12Cat Skid Steer
686	16 Cat Skid Steer
689	Skid Steer

OT	
448	14 Etnyre Chip Spreader
450	16 Etnyre Chip Spreader
649	Cat Broom SSL Bull8B
662	93 John Deere Broom 5300
673	00 Rosco Chall. II Broom
679	05 Rosco Chall.II Broom
684	12 Rosco Broom
688	14 Rosco Chall. 6 Broom
881	Kalamazoo Striper

DT	
218	88 Intl S/A Dump
219	90 Intl T/A Dump (2654)
220	95 Mack RD688S
224	92 KW T-450 Dump
227	07 KW T-800 Dump
228	05 Mack Slinger Dump
229	06 KW T-800 Dump
230	08 KW T-800 Dump
231	08 KW T-800 Dump
232	91 GMC TopKick Dump (Choke)
233	16 KW T-880 Dump
234	16 KW T-880 Dump
235	16 KW T-880 Dump
236	17KW T-880 Dump
237	18 KW T-880 Dump
238	18 T-880 Dump Truck

SB	
313	KW T880 Distributor
314	16 KW T880 (Tar Tk)
316	00 GMC 8500 Distributor
317	13 KW T-800 Distributor
318	08 KW T-800 Distributor
322	90 KW T-450 Distributor
336	95 KW T-450 Distributor
302	96 Freightliner Water Truck
315	02 Mack Water Truck
894	Crackfiller

PS approved 01-10-19

[EXHIBIT C]

THE 2019 BRUNSWICK HILLS TOWNSHIP ROAD BID

MEDINA COUNTY, OHIO

NON-COLLUSION AFFIDAVIT

STATE OF OHIO)

COUNTY OF Holmes) ss.

Steve Schlabach, being first duly sworn, deposes

and says that he/she is President of
(Sole Owner, Partner, President)

Melway Paving Co., Inc, the party making the foregoing proposal or bid; that such bid is genuine and not collusive or a sham; that said bidder has not colluded, conspired, connived, or agreed, directly or indirectly, with any bidder or person, to put in a sham bid, or that such other person shall refrain from bidding, and has not in any manner, directly or indirectly, sought by agreement or collusion, or communication or conference, with any person, to fix the bid price of affiant or any other bidder, or to fix any overhead, profit or cost element of said bid price, or of that of any other bidder, or to secure any advantage against the Brunswick Hills Township Trustees or any person or persons interested in the proposed contract, and that such bidder has not, directly or indirectly, submitted this bid, or the contents thereof, or divulged information or data relative thereto to any association or to any member or agent thereof.

Affiant

Sworn to and subscribed before me this day of

March 21, 20 19.

Notary Public in and for

(seal)

Holmes County, State of Ohio

My commission expires

Dlann Root
Notary Public, State of Ohio
My Commission Expires
October 21, 2020

[EXHIBIT D]

PERSONAL PROPERTY TAX VERIFICATION AFFIDAVIT

Now comes the bidder, Melway Paving Co., Inc.,

upon a competitive bid for 2019 Brunswick Hills Township Road Bid

on the 21st day of March, 2019, and

first being duly sworn deposes and says that he / she / it was not

(was or was not)

charged at the time the bid was submitted with any delinquent personal property taxes on the general tax list of personal property of Medina County.

(If applicable), the amount due and unpaid delinquent personal property tax

$_____. Further Affiant Sayeth Naught.

(signature)

Steve Schlabach-President

(title)_____

Sworn to before me this 21st day of March, 2019

Diann Root

Notary Public, State of Ohio

NOTARIAL SEAL STATE OF OHIO

Diann Root
Notary Public, State of Ohio
My Commission Expires
October 21, 2020

My Commission expires:

(THIS AFFIDAVIT MUST BE COMPLETED BEFORE A CONTRACT MAY BE ENTERED INTO UNDER OHIO REVISED CODE CHAPTER 5719.042)

[EXHIBIT E]

INDEPENDENT CONTRACTOR INDEMNIFICATION CLAUSE

The contractor and the owner mutually agree that the relationship formed by this agreement is intended to be that of customer and independent contractor, and is not an employment relationship. The contractor hereby represents that it is not an entity over whom the National Labor Relations Board has ever declined jurisdiction.

The contractor further agrees and covenants that, should a safety issue or complaint arise from, or involving, an employee, agent or representative of the contractor; the contractor will indemnify and hold the owner harmless, and will assume all legal and financial responsibility for said issue or complaint including, but not limited to, all fines, fees, costs, corrective action, provision of equipment, training and administration.
The contractor further agrees and covenants that, should a safety related issue, suit, or complaint be filed against the owner by an employee, agent, or representative of the contractor, the contractor will pay all associated costs of the owner, as the owner deems necessary, in order to defend, correct, or resolve said issue or complaint.

Signed: Melway Paving Co., Inc.

Contractor Steve Schlabach-President

03-21-19

Date

SUMMARIZED ENGINEER'S ESTIMATE

2019 BRUNSWICK HILLS TOWNSHIP ROAD BID
FOR
COUNTY SPEC. 402 INTERMEDIATE ASPHALT COURSE &
ODOT ITEM 422 SINGLE CHIP & SEAL
WITH STIPULATED TRAFFIC CONTROL

Proposal No. 1 - T.H. 138 Laurel Road (W.130th to Brunswick City Limits) $ 120,915.40

Proposal No. 2 - T.H. 103 S. Carpenter Road (Sleepy Hollow to Laurel) $ 110,879.29

Grand Total **$ 231,794.69**

SUBMITTED BY: Andrew J. Conrad
Andrew J. Conrad, P.E., P.S.
Medina County Engineer

DATE: 1-16-2019

CONTRACTOR'S
BID STATEMENT AND SUMMATION

2019 BRUNSWICK HILLS TOWNSHIP ROAD BID
FOR
COUNTY SPEC. 402 INTERMEDIATE ASPHALT COURSE &
ODOT ITEM 422 SINGLE CHIP & SEAL
WITH STIPULATED TRAFFIC CONTROL

Proposal No. 1 - T.H. 138 Laurel Road (W.130th to Brunswick City Limits) $ 101,724.55

Proposal No. 2 - T.H. 103 S. Carpenter Road (Sleepy Hollow to Laurel) $ 87,855.20

Grand Total $ **189,579.75**

COMPANY NAME: Melway Paving Co., Inc.

SUBMITTED BY: Steve Schlabach

COMPANY TITLE: President

ADDRESS: 7571 State Route 83

ZIP: Holmesville, OH 44633

PROPOSAL NO. 1 of 2 Proposals

CONTRACTOR'S BID BLANK

To the Board of The Brunswick Hills Township Trustees ;

The undersigned, having full knowledge of the site and specifications for the following proposal, hereby agrees to furnish all services, labor, material and equipment necessary to complete said proposal as specified by the stipulated completion date(s). The undersigned further agrees to accept this total amount bid (based on estimated quantities) and understands that actual payment may vary according to actual quantities used. The unit prices bid shall be applied to actual quantities of materials used to form the basis of final payment. The total of said payments for all individual proposals will not exceed the total amount awarded for the entire contract.

Date of Bid Opening: 1:30 P.M., Ohio Time March 21st, 2019

Date of Completion: September 13th, 2019

For improving T.H. 138 Laurel Road Section West 130th to Brunswick City Limits

Materials identified by 2016 State of Ohio, Department of Transportation, Construction and Material Specifications, January 1, Edition shall prevail.

Length:	3,980	(Feet)	Length:	0.75	(Miles)
Width:	21.0	(Feet)	Choke Aggregate Rate:	10.0	(Lbs/SY)
Area:	9,287	(Sq. Yds.)	Mix Aggregate Rate:	150	(Lbs/SY)
Repair Rate:		(Cu. Yds./Mile)	CMS-2 Rate:	17.5	(Gals/Ton)
Aggr. Rate:	20	(Lbs/SY)	CRS-2 Rate:	0.55	(Gals/SY)

Item	Quantity	Units	Item Description	Unit Cost	Total Cost
407	929	Gals	SS-1 Bit. Tack Coat @ 0.1 Gals/S.Y.	$ 2.00	$ 1,858.00
CS402	826	Tons	2" County Spec. Inter. Course @ 3200 Lbs./C.Y.	75.00	61,950.00
703	46	Tons	No. 9 Limestone Choke at 10 Lbs/SY	19.00	874.00
614	0.75	Miles	Temp. Center Line, Class 2 (CS402 Base Course)	400.00	300.00
422	93	Tons	#8 ACBF Slag Cover Aggr. @20 Lbs./C.Y.	80.00	7,440.00
422	5,108	Tons	CRS-2 Bit. Latex Mod. Seal Coat @ 0.55 Gals/S.Y.	2.20	11,237.60
617	280	Tons	24" Crushed Berm Material (3" Depth)	30.00	8,400.00
643	0.75	Miles	Yellow Water-Based Painted Center Line, Class 1	2,560.00	1,920.00
643	1.51	Miles	White Water-Based Painted Center Line, Class 1	2,045.00	3,087.95
643	30	L.F.	24" White Polyester Painted Stop Line, Class 1	11.90	357.00
604	2	Each	Furnish & Install Survey Monuments, EJIW 2966Z with 2965A Box Cover	555.00	1,110.00
614	1	Lump Sum	Traffic Control – CS402 & Chip Seal	3,190.00	3,190.00
			Grand Total		**$101,724.55**

Company Title: President Telephone: (330) 279-9000 Date: 03-21-19

Company Name: Melway Paving Co., Inc. By: Steve Schlabach

PROPOSAL NO. 2 of 2 Proposals

CONTRACTOR'S BID BLANK

To the Board of The Brunswick Hills Township Trustees ;

The undersigned, having full knowledge of the site and specifications for the following proposal, hereby agrees to furnish all services, labor, material and equipment necessary to complete said proposal as specified by the stipulated completion date(s). The undersigned further agrees to accept this total amount bid (based on estimated quantities) and understands that actual payment may vary according to actual quantities used. The unit prices bid shall be applied to actual quantities of materials used to form the basis of final payment. The total of said payments for all individual proposals will not exceed the total amount awarded for the entire contract.

Date of Bid Opening: 1:30 P.M., Ohio Time March 21st, 2019

Date of Completion: September 13th, 2019

For improving T.H. 103 South Carpenter Road Section Sleepy Hollow Road to Laurel Road

Materials identified by 2016 State of Ohio, Department of Transportation, Construction and Material Specifications, January 1, Edition shall prevail.

Length:	3,464	(Feet)	Length:	0.66	(Miles)
Width:	21.0	(Feet)	Choke Aggregate Rate:	10.0	(Lbs/SY)
Area:	8,083	(Sq. Yds.)	Mix Aggregate Rate:	150	(Lbs/SY)
Repair Rate:		(Cu. Yds./Mile)	CMS-2 Rate:	17.5	(Gals/Ton)
Aggr. Rate:	20	(Lbs/SY)	CRS-2 Rate:	0.55	(Gals/SY)

Item	Quantity	Units	Item Description	Unit Cost	Total Cost
407	808	Gals	SS-1 Bit. Tack Coat @ 0.1 Gals/S.Y.	$ 2.00	$ 1,616.00
CS402	719	Tons	2" County Spec. Inter. Course @ 3200 Lbs./C.Y.	75.00	53,925.00
703	40	Tons	No. 9 Limestone Choke at 10 Lbs/SY	19.00	760.00
614	0.66	Miles	Temp. Center Line, Class 2 (CS402 Base Course)	400.00	264.00
422	81	Tons	#8 ACBF Slag Cover Aggr. @20 Lbs./C.Y.	80.00	6,480.00
422	4,446	Tons	CRS-2 Bit. Latex Mod. Seal Coat @ 0.55 Gals/S.Y.	2.20	9,781.20
617	244	Tons	24" Crushed Berm Material (3" Depth)	30.00	7,320.00
643	0.66	Miles	Yellow Water-Based Painted Center Line, Class 1	2,560.00	1,689.60
643	1.32	Miles	White Water-Based Painted Center Line, Class 1	2,045.00	2,699.40
604	1	Each	Furnish & Install Survey Monuments, EJIW 2966Z with 2965A Box Cover	555.00	555.00
614	1	Lump Sum	Traffic Control – CS402 & Chip Seal	2.765.00	2,765.00
			Grand Total		**$ 87,855.20**

Company Title: President Telephone: (330)279-9000 Date: 03-21-19

Company Name: Melway Paving Co., Inc. By: Steve Schlabach

2019 BRUNSWICK HILLS TOWNSHIP ROAD BID
FOR
COUNTY SPEC. 402 INTERMEDIATE ASPHALT COURSE & ODOT ITEM 422 SINGLE CHIP & SEAL WITH STIPULATED TRAFFIC CONTROL

SUPPLEMENTAL SPECIFICATIONS

I. PROJECT SCOPE

Bids are requested for County Spec. 402 Intermediate Asphalt Course & ODOT Item 422 Single Chip & Seal with stipulated Traffic Control on 1.41 mile of roads in Brunswick Hills Township, Medina County, Ohio.

Application rate for the ODOT Item 422 seal coat included in the individual proposals can/should be adjusted by the Contractor to rates appropriate to the conditions he finds at the time of application. At no time shall the adjusted rates exceed those specified without **prior** approval by the Brunswick Hills Township Trustees.

The Township reserves the right to eliminate, increase or decrease the estimated quantities of any line item or to non-perform any lump sum item.

The Contractor shall be capable of adjusting to these demands and perform any additional work as directed by the Board of Trustees or their representative.

The Contractor will be responsible for suppling all aggregate needed for the project.

II. PROJECT STARTUP/COMPLETION

Before construction starts on any portion of this project, the Township shall notify all emergency agencies, post offices, the local school district, and residents affected by the improvement and advise each of the estimated time that the project is expected to take.

Work shall be completed to the satisfaction of the Township and the road(s) shall be opened by **September 13th, 2019**. Should the work not be complete by **September 13th, 2019**, the contractor may be subjected to pay liquidated damages at the rate specified in ODOT 108.07, in addition to the costs incurred by the Township for inspection supervision and other related engineering expenses.

Any request for extension of the completion date must be made by the contractor, in writing, fifteen (15) days prior to the original completion date. The Contractor shall state reasons for and the number of days requested for the extension.

The Contractor shall supply sufficient proof of the need for extension such as diary of days lost due to extraordinary weather, extra work authorized by the Township, and/or circumstances beyond control. The Township will only consider an extension of completion after receiving a written request. Extension of the completion date shall only be given upon the approval of the Board of Township Trustees.

Delays caused by Contractor scheduling conflicts and Contractor ordering of materials will not be considered as grounds for extension approval.

III. SPECIFICATIONS & TERMS

The Construction & Material Specifications of the State of Ohio, Department of Transportation (CMS) (latest edition as of the date of advertisement), excluding sections 102 and 103 titled "Bidding Requirements and Conditions" and "Award and Execution of Contract" shall serve as standard specifications for contract work awarded hereunder. Said Construction & Material Specifications are referenced herein as the "Standard Specifications". Requirements, terms, conditions and covenants of the Contract, Instructions to Bidders, Supplemental Specifications, and Bid Documents shall control over conflicting terms found in the Standard Specifications. Wherever in the contract documents reference is made to the CMS, the provisions of the referenced Item shall have the full force and effect as if rewritten herein.

However, the method of measurements, basis of payment, and pay items shall be directed in the material specifications or bid proposal forms. The Contractor shall be responsible for providing his own copy of the CMS.
Wherever the following terms appear in the Standard Specifications, said terms shall have the following meaning:

A. The terms "State", "State of Ohio", "Department", and "Department of Transportation" refer to the Township, acting through its Board of Trustees.

B. The terms "Director" and "DDD" refers to the Board of Township Trustees or it's duly authorized representative.

C. The terms "DCE" and "Engineer" refers to the Medina County Engineer fulfilling his statutorial obligation to the Brunswick Hills Township Board of Trustees.

D. The term "Laboratory" refers to such testing laboratory or consultant as shall be designated by the Board of Township Trustees or it's duly authorized representative.

A numerical designation for an "Item" referenced herein refers to the description of said Item Number as provided by the Standard Specifications. Bidders are specifically referred to the definitions provided by section 101.03 of the Standard Specifications. Any undefined trade and technical words and terms shall be deemed to have the meaning established by trade usage in the highway/bridge construction and civil engineering consultation business.

All work and materials furnished shall conform to the CMS, unless otherwise indicated in the Supplemental Specifications or as directed by the Board of Township Trustees. Materials and/or products used for this project shall have their specifications submitted to the project coordinator at the pre-construction meeting for review.

IV. OTHER CONTRACTOR DUTIES

In addition to the duties cited by the Standard Specifications and elsewhere in these Bid Documents, the Contractor has the following duties:

A. The Contractor shall diligently protect and preserve all stakes, paint marks, bench marks and survey monuments set or used by the Township or County, and shall be responsible for securing therefrom proper lines, stationing and check of application rates for the resurfacing work to be performed. All necessary control lines and grades will be given to the Contractor by the Township. The Township will provide construction staking as needed by the Contractor. There will be no cost to the Contractor, if proper advance notice (5 working days) is given. Request for construction staking can be made through the Project Coordinator. If it is necessary to reset any stakes which have been disturbed, the Contractor must pay the Township all such costs of

re-staking at the rate of One-Hundred Dollars ($100.00) per hour.

B. At least two working days prior to commencing construction operations in an area which may involve underground utility facilities, the Contractor shall notify the Project Coordinator, the Ohio Utility Protection Service (1-800-362-2764), the Oil and the owners of each underground utility facility, to allow surface marking of facility locations.

V. **INSPECTION**

The Board of Township Trustees and duly authorized assistants and agents, shall have, at all times, immediate access and right to enter upon the Work site and other Work premises occupied by the Contractor. The Contractor shall provide safe and proper facilities for permitting such entrance and for inspecting and testing purposes. Subcontractors shall have similar obligations imposed by subordinate contracts. Suppliers shall allow access for inspection and/or testing for materials being utilized as part of the contract. The Contractor shall furnish the Township with all reasonable facilities for ascertaining that the materials and Work are in accordance with the requirement and intention of the Specifications and contract, even to the extent of uncovering or removing portions of finished Work.

The Contractor shall give definite information, at any time, as to the place from which, or persons from whom, any material is being or will be procured. All materials to be used may be subjected to such tests as the Board of Township Trustees may require to assure that such materials conform, in all respects, to the requirements of the Specifications, or that they are equal in quality to samples submitted by the Contractor. All materials which do not conform to such requirements shall be rejected, and the Contractor shall remove such rejected materials from the vicinity of the Work within twenty-four (24) hours thereafter. All material used on the project must be available for inspection by the Board of Township Trustees at least forty-eight (48) hours before installation.

The inspection and supervision of the Work and materials by the Board of Township Trustees, assistants, and inspectors is intended to aid the Contractor in accomplishing the fulfillment of duties and obligations under the contract, but such inspection and supervision shall not relieve the Contractor from contract obligations, absent written waiver by the Board of Trustees.

Defective Work shall be made good and unsuitable materials may be rejected, notwithstanding that such Work and materials have been previously overlooked by the Board of Township Trustees and accepted for estimated for payment. If the Work, or any part thereof, is found, at any time before the acceptance of the whole Work and for the period of the Maintenance Bond thereafter, to be defective, or to contain defective materials, the Contractor shall make good such defects under the direction of the Board of Township Trustees.

The Contractor shall schedule inspection a minimum of twenty-four (24) hours in advance of the performance of the respective Work. At the pre-construction meeting, the Board of Township Trustees shall provide to the Contractor with phone numbers and names of a contact person and of the Board of Township Trustees's inspectors. The Contractor shall inform the Board of Township Trustees of his Work schedule and the hours that Work will be performed. The Board of Township Trustees shall approve the Contractor's schedule and hours of operation before the Contractor may begin Work.

When work is scheduled and the Contractor desires to change the approved schedule, the Contractor shall contact the Board of Township Trustee's inspector at or before 7:30 a.m. of the scheduled Work date to cancel or adjust the hours of inspection. If the Contractor fails to contact the Board of Township Trustee's inspector as stated above or if the notice is within two (2) hours

of the scheduled inspection and is insufficient to cancel attendance by the Board of Township Trustee's inspector, the Contractor may be charged for two (2) hours of inspection time at the rate of fifty (50) dollars per hour.

VI. CHANGES IN QUANTITY OF WORK

The material quantities as given in the Estimated Quantities are approximations only. The Township Trustees shall have the power to alter by increasing, decreasing or deleting the quantities of Work to be done, either before or after the commencement of construction.

If such change involves the reduction or omission of any material or Work called for in the original Bid Documents or Specifications, there shall be no right with the Contractor for any claims for losses or damages, or for loss of profit, growing out of such omission. If any such change involves additional material or labor, upon which the price is fixed in the Contract, that price shall govern. Any such change shall in no way relieve the Contractor of or affect any of the obligations hereunder.

VII. NIGHT, SUNDAY & HOLIDAY WORK

No Work requiring the presence of the Board of Township Trustee's inspectors will be permitted from 9:00 p.m. through 7:00 a.m. or on Saturday, Sunday or Holidays, except in a case of an emergency, and then only to such an extent as is absolutely necessary and by written permission of the Board of Township Trustees.

VIII. SUBCONTRACTING

All subcontractors must be approved by the Board of Township Trustees. The Contractor shall submit a written list of subcontractors and suppliers that he intends to use to the Board of Township Trustees prior to the signing of the final contract agreement. The list shall include contact name, address, cell number and office contact information.

IX. CHANGE ORDER

No deviations from the original Bid Documents and specifications set forth herein shall be authorized unless done so in writing, signed by the Board of Township Trustees specifying the exact cost of such change.

X. PAYMENT

Payment(s) shall be made in conformity to Chapter 153 of the Ohio Revised Code.

XI. PRE-CONSTRUCTION MEETING

Shortly after the contract is awarded, a pre-construction conference may be arranged to discuss the scheduling and performance of the work. The prime Contractor and each of his Subcontractors shall attend the conference. The prime Contractor shall provide at pre-construction meeting a list of the products to be used, subcontract contact information, and construction progress schedule.

XII. PRE-BID INQUIRIES/ PROJECT COORDINATOR

Any questions regarding the contents of these bid specifications should be directed to:

Dan Becker, Project Engineer
Medina County Engineer's Office
791 West Smith Road
Medina, Ohio 44256
(330) 723-9662

Questions regarding this project, scheduling a pre-construction meeting, etc. should be directed to the Township Service Department through:

Paul Magovac, Road Supervisor
(330) 220-4784

Questions concerning administrative needs, e.g. invoicing, payments, prevailing wage rates, contract agreements, etc. should be directed to the Township Trustees through:

Katherine Esber, Brunswick Hills Township Fiscal Officer
1918 Pearl Rd.
Brunswick Hills, Ohio 44212
(330) 220-8182

XII. BASIS OF PAYMENT: MATERIAL QUANTITIES

The accumulated quantities of each material used to complete these individual operations shall be totaled and tabulated by proposal. Payment will be the Unit Price Bid times the quantity of material ticketed and approved to complete each proposal.

Said Unit Price and payment shall be full compensation for furnishing and placing all materials unless otherwise noted.

XIII. MATERIALS

A. BITUMINOUS PLANT MIX

Item County Spec (C.S.) 402 - Asphalt Concrete Base Course

1. Bituminous Hot Mix Asphalt material specified as (County Spec.) CS 402 shall meet the appropriate requirements of ODOT Item 441 with the following exceptions:

   A. All coarse aggregates used in these proposals will be crushed limestone and will conform to 703. The use of recycled aggregates or pavement grindings in plant mix is prohibited.

   B. Coarse and fine aggregates shall be combined such that the resulting blend shall be within the following limits:

Sieve	Total Percent Passing
1"	100
3/4"	85-100
3/8"	20-45
No. 4	15-30
No. 16	10-25
No. 50	3-15
No. 200	0-5
PG 58-28	4.3%

C. Successful proportioning has been achieved using No. 67 large aggregate and natural sand being limited to approximately 10% of the total mix weight.

D. Previous experience has shown that proper proportioning will achieve a yield of approximately 3,200 lbs. per cubic yard.

E. Estimated quantities illustrated on the accompanying Contractor's Bid Blanks are derived using this 3,200 lb. per cubic yard conversion factor.

F. Allowance deviation of bitumen content from the target value be limited to + or - 0.3 percent.

G. The quantity of bitumen added may be adjusted by the Contractor within the specified limits to produce a satisfactory mixture.

2. Preparing Existing Surface

A. Power-brooming should be sufficient preparation for all portions of the road surface being resurfaced.

B. Butt Joints may be needed at the start and ending of the resurfacing and at all intersections. The costs incurred to perform the subsequent butt joint operation are incidental to this item.

C. The cleaned surface will be tacked pursuant to Item 407 included in the accompanying bid blanks prior to resurfacing.

D. The Contractor will be required to string the edge of any course where his operator is unable to produce a continual straight pavement edge satisfactory to the Engineer.

3. Application and Finishing:

A. Pavement mixtures shall be spread and finished in accordance with 401.15 except that the weight to volume conversion factor derived by the mixture's specific JMF shall apply.

B. The spreading operation shall be achieved through the use of a full-size, self-propelled paver per 401.12 having a basic heated screed width of 10 feet, adjustable hydraulic side extensions, and proper overall size and weight to maintain uniform profile grade and continual material placement.

C. Resurfacing will be restricted to paving each travel lane separately. Full-width paving of the entire pavement surface will not be allowed.

D. The longitudinal joint from any one day's resurfacing shall not remain open for more than 24 hours. Any accumulated stone against said joint shall be power-broomed away before the joint is closed.

4. Rolling

A. Rollers shall conform with 401.13 and there will be a minimum of two rollers incorporated in the paving train. Additional rollers may be necessary should the speed of the resurfacing warrant.

B. Rollers may be steel tandem, 3-wheel or a combination of pneumatic tire and steel tandem at the discretion of the Contractor.

C. Compaction of the mixture shall be in accordance with 401.16. Rolling may be delayed to avoid excessive lateral displacement in deeper thicknesses of the overlay if directed by the Engineer. Final rolling shall be continued until roller marks are eliminated.

B. **ITEM 422 CHIP & SEAL APPLICATION**

422.02 Materials -

1. Item 422 (CRS-2/RS-2 Bituminous Seal Coat) will be refined from asphaltic base crude, applied at the rates stipulated on the individual bid proposals and shall conform to 702.04.

2. All seal coats will incorporate a modified emulsion containing a liquid latex additive of no less than 3% of the total volume applied.

3. Cover aggregates used in these proposals will be No. 8 crushed air-cooled blast furnace slag and will conform to 703.05.

422.05 Test Strip -

Construction of a test strip will not be required to determine initial application rates. The target application rates for the Binder and Cover Aggregate are included in the Contractor's Bid Blank(s).

Adjustments to the application rates can and should be made by the Contractor to rates appropriate to the conditions found at the time of application and are to be made in accordance with 422.07 and 422.08.
At no time shall the adjusted rates exceed those specified on the Contractor's Bid Blank(s) without prior approval by the Engineer.

422.09 Construction Operation -

The sealed surface shall be power-broomed within 24 hours of the initial application to remove excess aggregate. Additional costs incurred to perform the subsequent brooming operation are incidental to this item. All drive aprons that receive CS402 will be chip & sealed.

422.10 Quality Control -

1. The Township may sample any bituminous materials used.

2. It will be the Contractor's responsibility to collect these samples, representative of his production when directed by the Inspector.

3. Samples will be taken in the presence of the Township's Inspector at the job site of each course unless otherwise instructed.

4. The completed samples become the property of the Township.

5. These samples may be tested by the Township at an independent testing laboratory.
6. Determination of mix compliance will be derived from the results of these tests.

7. Failure of a product to meet the requirements of its applicable specifications may result in non-acceptance of the work and subject the Contractor to possible penalty deemed appropriate by the Brunswick Hills Township Trustees after consultation with the Medina County Engineer.

422.13 Basis of Payment -

Item 422.12 will not be used as a method of measurement for payment. The Township will pay for accepted quantities at the contract prices for the actual number of tons of aggregate and the actual number of gallons of bituminous material placed, completed, and accepted.

Permanent Traffic Paint

1. Pavement markings shall be fast dry, water based paint ready-mixed and comply with Item 740 of the CMS.

2. Glass beads shall conform to Item 740.03 Type B and will be applied at a rate not less than 15 pounds per hundred square feet in accordance with Item 642.04.

3. Official striping logs are available through the Township.

XIV. TICKETING, MATERIAL SAMPLING & TESTING

A. TICKETING

Payment will depend on an accurate and disciplined collection of weight tickets accumulated during the construction of individual Items to complete each proposal.

Consequently, the Township will require tickets daily for all materials delivered to the project site.

Surplus portions of any material remaining in a truck at the end of the completed day's work or proposal shall be re-weighed, ticketed and a duplicate copy of said ticket presented to the Township's Inspector no later than the start of the next working day.

B. MATERIAL SAMPLING & TESTING

The Township may require at least two (2) sets of twin samples during each day of resurfacing, generally (1) set morning and (1) set afternoon from each course applied.

It will be the Contractor's responsibility to collect these samples representative of his production when directed by the Inspector.

Samples will be taken in the presence of the Inspector at the job site of each course unless otherwise instructed.

The specific method of sampling will be left to the individual discretion of the Contractor except for the following requirements:

1. The completed samples become the possession of the Township.

2. These samples may be tested by the Township in an independent testing laboratory.

3. Determination of mix compliance will be derived from the results of these tests.

4. Failure of a product to meet the requirements of its applicable specification may result in non-acceptance of the work and subject the Contractor to possible penalty as described in the O.D.O.T. Construction and Material Specification Handbook Acceptance Schedule for deviations for the aggregate and as outlined below in the Acceptance Schedule for Asphalt Binder deviations.

Pay Factor	% Deviation from JMF
1.00	0
0.98	0.01-0.20
0.90	0.21-0.30
0.80	0.31-0.40
0.60	0.41-0.50
Remove and Replace	>0.50

The Contractor may have the sister sample retained by the Township tested at his expense by an independent test lab acceptable to both the Board of Township Trustees and the Contractor if he wishes to dispute the original test results. This test result will be binding.

XV. MAINTAINING TRAFFIC

A. **All roads will remain open to local traffic at all times.**

B. The Contractor will erect and maintain "Road Construction-Traffic Maintained" (OC-4) or "Road Work Ahead" (W20-1), "Loose Stone", Special "Shoulder Drop Off" signs & "DO NOT PASS" and "PASS WITH CARE" signs along the project, as well as at intermediate intersections. **These signs will be left up in place until all work is completed and approved.**

C. The Contractor will erect and maintain supplemental traffic control devices, Type III barricades, and flagger(s) on specified stationary and mobile supports of sufficient strength, stability and reflectorized with Type G sheeting in compliance with the "Ohio Manual of Uniform Traffic Control Devices" and the Ohio Department of Transportation, "Temporary Traffic Control Manual", 2005 edition.

D. Flaggers will wear proper attire, utilize a "Stop/Slow" paddle and maintain a "Flagger Ahead" sign (W20-7) or (W20-7a) on a mobile support no less than 150 feet in advance of his/her stationary position.

E. Mobile signs shall be repositioned to appropriate locations periodically during the workday.

F. Additional flaggers will also be required if a construction train becomes too long or when the construction train approaches within 100' of an intersecting roadway, commercial driveway or other major access.

G. Any hazard created through the actions of the Contractor will prompt the Contractor to make additional efforts to protect the general public. Contractor will bear any additional expenses to provide this protection.

H. If it becomes necessary for the Township to supplement any proposal with traffic control normally provided by the Contractor, the acting authority will invoice the Primary Contractor of all costs incurred plus a 10% penalty.

I. Figure No.1 will be considered the minimum traffic control required to conduct traffic around the paving train.

J. It is the responsibility of the Prime Contractor to have the necessary traffic control devices and flagger(s) on these work sites prior to the start of any work. Failure to do so is sufficient cause for the Township to suspend work.

K. **At no time will the Township allow work to be done on both lanes of the road at the same time.**

XVI. MISCELLANEOUS CONSTRUCTION INCIDENTALS

The Primary Contractor will be held responsible for damages caused by him or his Subcontractors to any private drives, personal property, or overhead utilities resulting from associated construction work on this contract. He will also be required to repair what the County Engineer and or Township determines as flawed work at his expense.

XVII. WEATHER CONDITIONS

Application of bituminous materials will NOT be allowed under any of the following conditions:

1. When pavement surface is wet;
2. When air or ground temperature is below 60°F;
3. When weather conditions either threaten or prevent proper handling, mixing, application, or compaction of work to be performed.

XVIII. NEW MONUMENT BOXES

Existing centerline monument boxes (including any that may be buried under the existing pavement surface) will be located and spot painted by the County Surveyor before the pavement planing operation.

At locations where no monument box exists, install a new Medina County monument box after the asphalt concrete surface course has been placed. Contact the Township inspector no less than one week prior to installing new monument boxes so the proposed location can be spot painted in the field.

Use a core drill to cut a cavity for installation of the new monument box, taking care not to disturb the monument pin, and insert an East Jordon Iron Works 2966Z cast iron frame and 2965A frame in the opening. Set the monument box so that the top of the casting and cover will be 1/4" to 1/2" below the asphalt surface course. The void between the frame and the cavity boundary shall be filled with non-shrink mortar conforming to CMS 705.22.

The completed assembly shall be protected by a 1/2 " plywood covering (nailed in place) until the mortar has set sufficiently. Plywood should be no bigger than 3' x 3' square.

The unit price bid for this item shall include all labor, equipment and materials necessary to complete the work described above.

GENERAL NOTES:

FLAGGERS

1. Flaggers, one for each direction, shall be used to control traffic continuously for as long as a one lane operation is in effect. The flaggers shall be able to communicate with each other at all times.

LENGTH OF CLOSURE

2. It is required that the length of closure be kept to a minimum at all times, as directed by the Engineer, with a maximum allowable length of 5000 feet (1520 meters).

   When the ambient Temperature exceeds 80°fahrenheit (27° centigrade), the Engineer may increase the maximum allowable length of closure to allow for sufficient cooling of new pavement.

   The Engineer may shorten the maximum allowable length of closure to relieve excessive traffic backups or to improve traffic operation.

SIGN LOCATION AND SPACING

3A. The minimum spacing between work zone signs is shown in Table 1. Maximum spacing should not be greater than 1.5 times the distances shown in Table 1.

3B. Sign spacing should be adjusted to avoid conflict with existing signs. Minimum spacing to existing signs shall be 200 feet (60 meters) for speeds of 45 mph or less and a minimum of 400 feet (120 meters) for speeds of 50 mph or greater.

3C. The location of the advance warning signs should be adjusted to provide for adequate sight distance for the existing vertical and horizontal roadway alignment.

ADJUSTMENTS FOR SIGHT DISTANCE

4. The location of the flagger station and the advance warning signs should be adjusted to provide for adequate sight distance for the existing vertical and horizontal roadway alignment.

BASIC SIGNING

5A. ROAD WORK AHEAD (W20-1) signs shall be provided on entrance ramps or roadways entering the work limits.

5B. END ROAD WORK (G20-2) signs are only required for lane closures of more than one day. It is intended that these signs be placed on the mainline, on all exit ramps, and on roadways exiting the work limits.

5C. Overlapping of signing for adjacent projects should be avoided where the messages could be confusing. Any W20-1 or G20-2 sign which falls within the limits of another Traffic control zone shall be omitted or covered during the period when both projects are active.

SIGNING DETAILS

6A. The Advisory Speed plaque W13-1 shall be used when specified in the plan.

6B. 36 inch (900 millimeter) warning signs may be used when the approach speed limit is 40 mph or less.

FLASHING WARNING LIGHTS

7. Type A flashing warning lights shown on the ROAD WORK AHEAD (W20-1) signs and on the LANE CLOSED AHEAD (W20-5) signs are required whenever a night lane closure is necessary.

CONES

8A. Cone spacing shall be as follows:
   a) Spacing along the buffer shall be 40 feet (12 meters) center to center.
   b) Spacing along the approach taper shall be 10 feet (3 meters) center to center.

8B. Cone sizes shall be as follows:
   a) Cones used for daytime traffic control shall have a minimum height of 28 inches (0.7 meters).
   b) Cones used for nighttime traffic control shall have a minimum height of 42 inches (1.1 meters).

8C. Provisions shall be made to stabilize the cones to prevent them from blowing over.

8D. A minimum of 2 cones shall be used to close the paved shoulder.

EQUIPMENT/MATERIALS STORAGE

9A. No equipment or material shall be located within the taper or buffer zone.

9B. When no work is being performed, all material and equipment shall be stored as per CMS 614.03.

AREA ILLUMINATION

10A. Adequate area illumination of each flagger station shall be provided at night. Use of portable flood lighting is acceptable.

10B. To ensure the adequacy of floodlight placement and the elimination of glare, the Contractor and the Engineer shall drive through the worksite each night when the lighting is in place. Light placement and shielding shall be adjusted to the satisfaction of the Engineer.

INTERSECTION/DRIVEWAY ACCESS

11. Within the length of closure, provision shall be made to control traffic entering from intersecting streets and major drives as necessary to prevent wrong-way movements and to keep vehicles off of new pavement not ready for traffic. The contractor shall:

   a) Place across the closed lane, either 3 drums (cones) or barricades,
   and/or
   b) Provide an additional flagger at every public street intersection and major driveway.

   Cones (drums) placed across the closed lane shall be located 25 feet (8 meters) beyond the projected pavement edges of the driveway or cross highway. For barricades, see Standard Construction Drawing MT-101.50.

   Existing stop signs shall be relocated as necessary to assure proper location for the traffic conditions.

   The method of control shall be subject to the approval of the Engineer.

CHIP SEAL OPERATION

12. For chip seal operations, additional signing shall be incorporated in the advance warning area.

   a) The LOOSE GRAVEL (W8-7) and FRESH TAR (W21-2) signs shall both be used in advance of the chip seal operation.

   b) Repeat the LOOSE GRAVEL (W8-7) sign with a 35 mph Advisory Speed plaque (W13-1) every half mile per CMS 422.03.

   c) The LOOSE GRAVEL (W8-7) and FRESH TAR (W21-2) signs shall both be used for signing of side roads intersecting the work area.

MT-97.11	OFFICE OF TRAFFIC ENGINEERING	FLAGGER CLOSING 1 LANE OF A 2-LANE HIGHWAY FOR PAVING OPERATIONS (NON-FED ONLY)	10-15-10
2/2			

SMB/LAM

FIGURE NO. 2

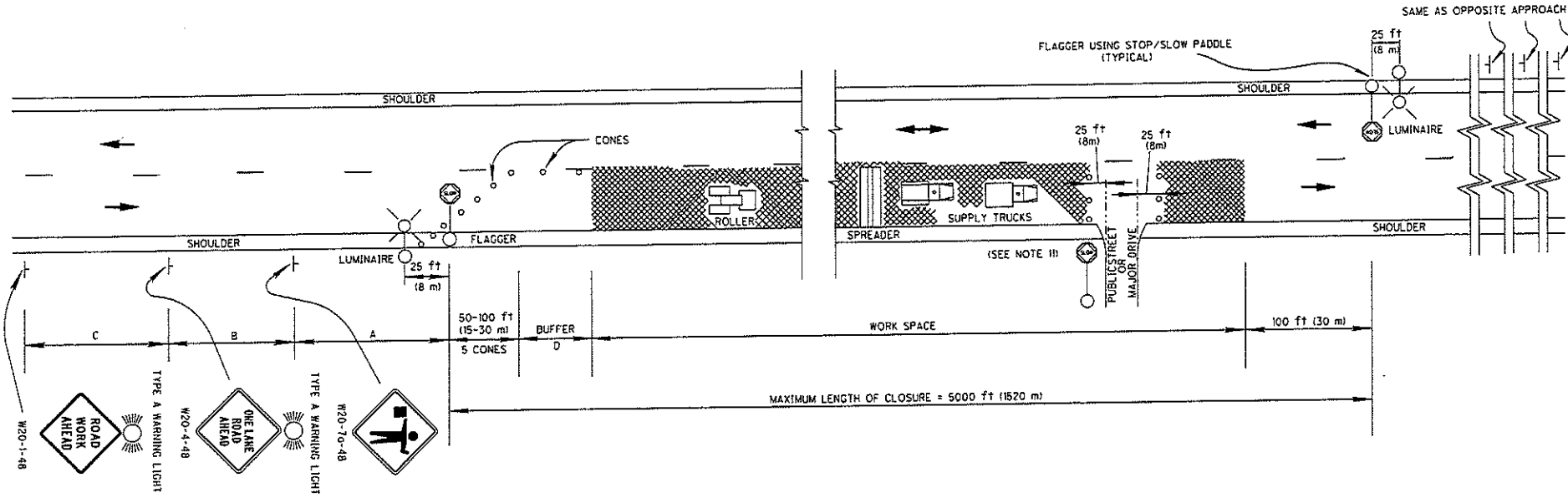

TABLE I (SIGN SPACING)

ROAD TYPE	DISTANCE BETWEEN SIGNS FT(m)		
	A	B	C
TWO-LANE ≤40 MPH	100 (30)	100 (30)	100 (30)
TWO-LANE 45-50 MPH	350 (100)	350 (100)	350 (100)
TWO-LANE 55 MPH	500 (150)	500 (150)	500 (150)

TABLE II

SPEED LIMIT (MPH)	BUFFER (D) FT (m) MINIMUM
25	155 (45)
30	200 (60)
35	250 (75)
40	305 (95)
45	360 (110)
50	425 (130)
55	495 (150)

LEGEND

DRUMS ○○○○○○

DIRECTION OF TRAVEL →

10-15-10

FLAGGER CLOSING 1 LANE OF A 2-LANE HIGHWAY FOR PAVING OPERATIONS (NON-FED ONLY)

OFFICE OF TRAFFIC ENGINEERING

MT-97.11

1/2

SHB/LAM

FIGURE NO. 1

FIGURE 2

2966Z Cleanout/Monument Box Frame

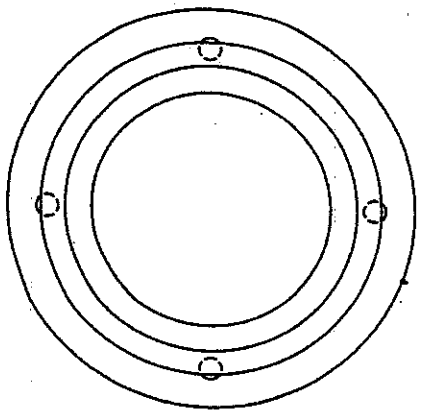

PLAN VIEW

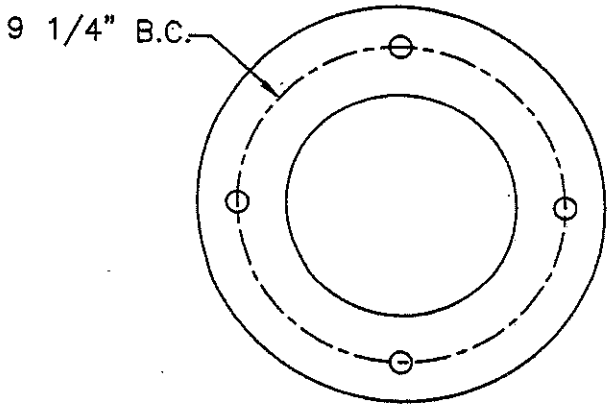

BOTTOM VIEW

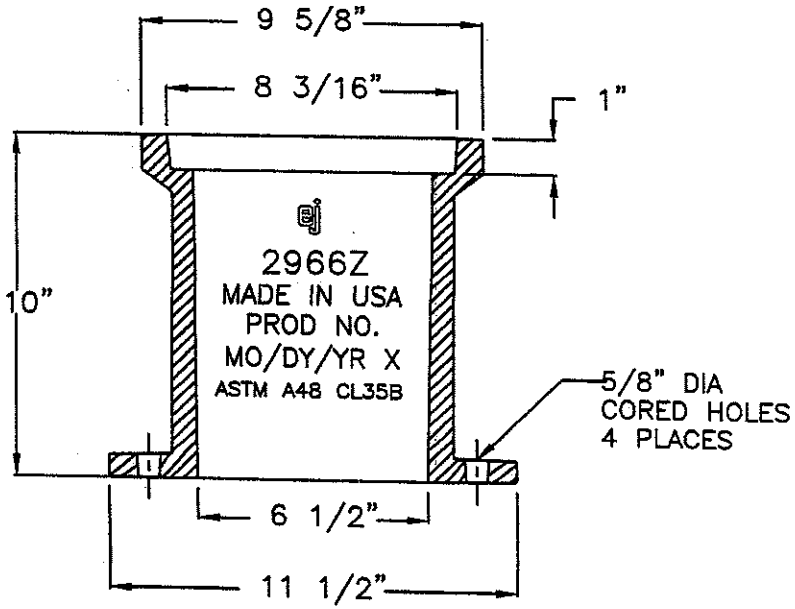

SECTION

Product Number
00296610

Design Features
-Materials
Gray Iron (CL35B)
-Design Load
Heavy Duty
-Open Area
n/a
-Coating
Dipped
- ⊥ Designates Machined Surface

Certification
- ASTM A48
-
-
-Country of Origin: USA

Drawing Revision
04/10/2008 Designer: GAD
10/01/2014 Revised By: DAE

Disclaimer
Weights (lbs./kg) dimensions (inches/mm) and drawings provided for your guidance. We reserve the right to modify specifications without prior notice.

CONFIDENTIAL: This drawing is the property of EJ GROUP, Inc., and embodies confidential information, registered marks, patents, trade secret information, and/or know how that is the property of EJ GROUP, Inc. Copyright © 2012 EJ GROUP, Inc. All rights reserved.

Contact
800 626 4653
ejco.com

FIGURE 2

FIGURE 2

FIGURE 2

2965A Cleanout/Monument Box Cover

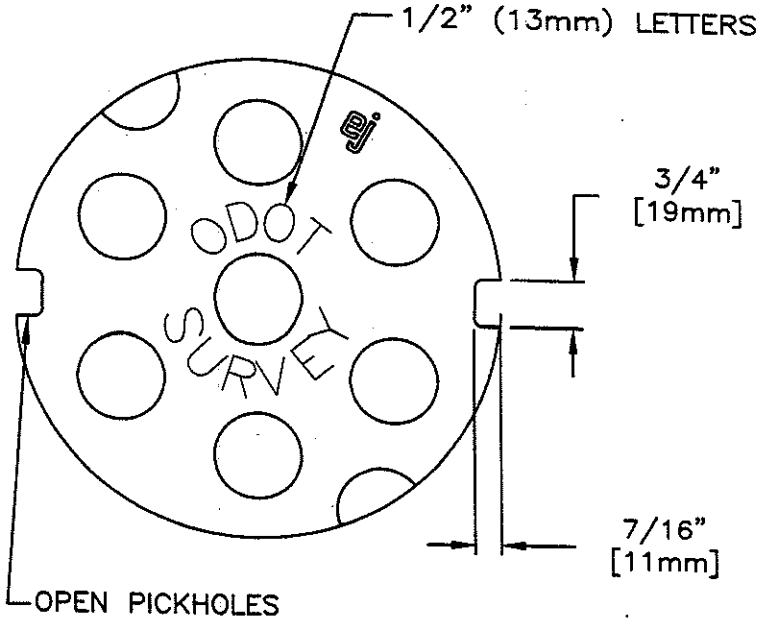

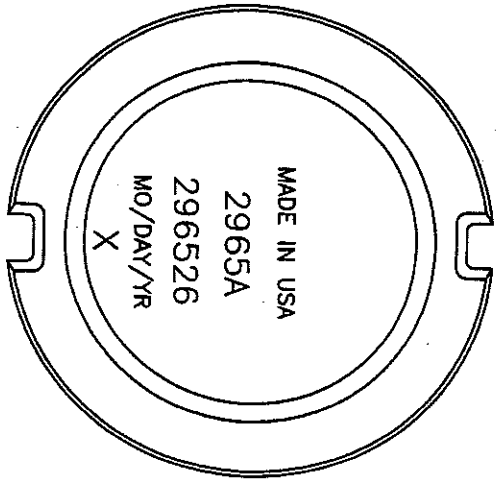

BOTTOM VIEW

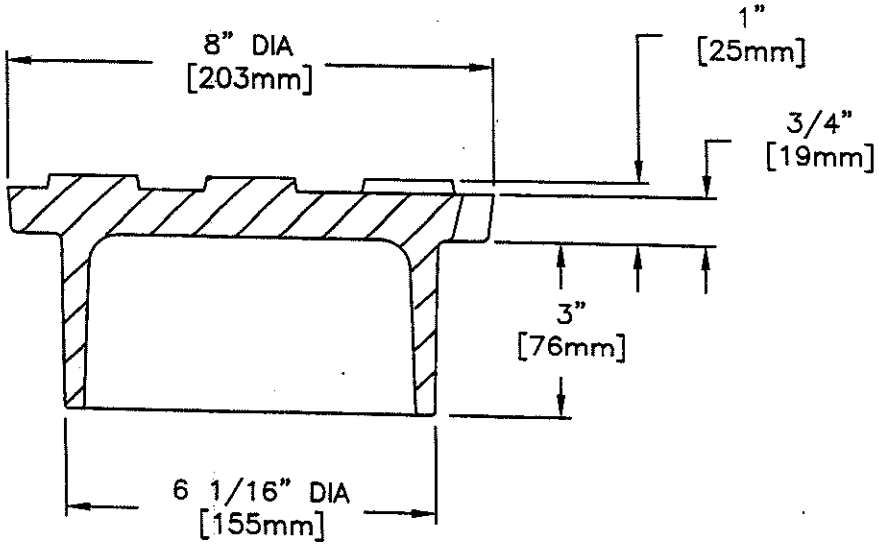

SECTION

Product Number
00296526

Design Features
-Materials
Gray Iron (CL35B)
-Design Load
Heavy Duty
-Open Area
n/a
-Coating
Dipped
- ✓ Designates Machined Surface

Certification
- ASTM A48
-
-
-Country of Origin: USA

Drawing Revision
07/19/2005 Designer: SBB
02/05/2014 Revised By: DVD

Disclaimer
Weights (lbs./kg) dimensions (inches/mm) and drawings provided for your guidance. We reserve the right to modify specifications without prior notice.

CONFIDENTIAL: This drawing is the property of EJ GROUP, Inc., and embodies confidential information, registered marks, patents, trade secret information, and/or know how that is the property of EJ GROUP, Inc. Copyright © 2012 EJ GROUP, Inc. All rights reserved.

Contact
800 626 4653
ejco.com

FIGURE 2

FIGURE 2

Prevailing Wage Determination Cover Letter

County: MEDINA
Determination Date: 02/19/2019
Expiration Date: 05/19/2019

THE FOLLOWING PAGES ARE PREVAILING RATES OF WAGES ON PUBLIC IMPROVEMENTS FAIRLY ESTIMATED TO BE MORE THAN THE AMOUNT IN O.R.C. SEC. 4115.03 (b) (1) or (2), AS APPLICABLE.

Section 4115.05 provides, in part: "Where contracts are not awarded or construction undertaken within ninety days from the date of the establishment of the prevailing wages, there shall be a redetermination of the prevailing rate of wages before the contract is awarded." The expiration date of this wage schedule is listed above for your convenience only. This wage determination is not intended as a blanket determination to be used for all projects during this period without prior approval of this Department.

Section 4115.04, Ohio Revised Code provides, in part: "Such schedule of wages shall be attached to and made a part of the specifications for the work, and shall be printed on the bidding blanks where the work is done by contract..."

The contract between the letting authority and the successful bidder shall contain a statement requiring that mechanics and laborers be paid a prevailing rate of wage as required in Section 4115.06, Ohio Revised Code.

The contractor or subcontractor is required to file with the contracting public authority upon completion of the project and prior to final payment therefore an affidavit stating that he has fully complied with Chapter 4115 of the Ohio Revised Code.

The wage rates contained in this schedule are the "Prevailing Wages" as defined by Section 4115.03, Ohio Revised Code (the basic hourly rates plus certain fringe benefits). These rates and fringes shall be a minimum to be paid under a contract regulated by Chapter 4115 of the Ohio Revised Code by contractors and subcontractors. The prevailing wage rates contained in this schedule include the effective dates and wage rates currently on file. In cases where future effective dates are not included in this schedule, modifications to the wage schedule will be furnished to the Prevailing Wage Coordinator appointed by the public authority as soon as prevailing wage rates increases are received by this office.

"There shall be posted in a prominent and accessible place on the site of work a legible statement of the Schedule of Wage Rates specified in the contract to the various classifications of laborers, workmen, and mechanics employed, said statement to remain posted during the life of such contract." Section 4115.07, Ohio Revised Code.

Apprentices will be permitted to work only under a bona fide apprenticeship program if such program exists and if such program is registered with the Ohio Apprenticeship Council.

Section 4115.071 provides that no later than ten days before the first payment of wages is due to any employee of any contractor or subcontractor working on a contract regulated by Chapter 4115, Ohio Revised Code, the contracting public authority shall appoint one of his own employees to act as the prevailing wage coordinator for said contract. The duties of the prevailing wage coordinator are outlined in Section 4115.071 of the Ohio Revised Code.

Section 4115.05 provides for an escalator in the prevailing wage rate. Each time a new rate is established, that rate is required to be paid on all ongoing public improvement projects.

A further requirement of Section 4115.05 of the Ohio Revised Code is: "On the occasion of the first pay date under a contract, the contractor shall furnish each employee not covered by a collective bargaining agreement or understanding between employers and bona fide organizations of Labor with individual written notification of the job classification to which the employee is assigned, the prevailing wage determined to be applicable to

that classification, separated into the hourly rate of pay and the fringe payments, and the identity of the prevailing wage Coordinator appointed by the public authority. The contractor or subcontractor shall furnish the same notification to each affected employee every time the job classification of the employee is changed."

Work performed in connection with the installation of modular furniture may be subject to prevailing wage.

THIS PACKET IS NOT TO BE SEPARATED BUT IS TO REMAIN COMPLETE AS IT IS SUBMITTED TO YOU. (Reference guidelines and forms are included in this packet to be helpful in the compliance of the Prevailing Wage law.)
wh1500

BEFORE FILING A PREVAILING WAGE COMPLAINT, PLEASE READ CAREFULLY!

You May File A Complaint With This Division If:

A. You were or are employed on the project.
B. You meet one of the following:

- Any person who submits a bid for the purpose of securing the award of a contract for construction of the public improvement.
- Any person acting as a subcontractor of a person mentioned in (B.1.) above.
- Any bona fide organization of labor which has as members or is authorized to represent employees of a person mentioned in (B.1. or B.2.) and which exists, in whole or in part, for the purpose of negotiating with employers concerning the wages, hours, or terms and conditions of employment of employees.
- Any association having as members any of the persons mentioned in (B.1. or B.2.) of this section.

Do Not Fill Out This Form If:

A. The project has been completed for two (2) years.
B. You acted as an "independent contractor" and not as an "employee" of the business, or you were self-employed.
C. You already have a judgement involving the same wage claim.
D. The contractor has filed for bankruptcy. (If so, you will need to contact the Bankruptcy Court for further instructions.)

Filing More Than One Complaint:

A. You must use a separate complaint form for filing against each contractor and/or project.
B. Each claimant intending to file against a contractor and/or project must use a separate complaint form.

Completing The Prevailing Wage Complaint Form:

A. Download or view the form, then print out a copy of the form (it is a legal size document, 8½" by 11").
B. Read all questions on the wage claim form carefully before answering. Please fill out your claim completely, legibly, and accurately. You must sign, date, and have it notarized.
C. Provide the contractor's name, name of business, correct address, county, and telephone number. You as the claimant are responsible for providing this information.
D. To help prove your claim, please provide copies of any documentation you have available. For example, pay stubs or a personal record of hours worked on the project. DO NOT SEND ORIGINALS.
E. Be certain that your name, address, social security number, and telephone number are correct. If you do not have a telephone number, please supply this Division with a telephone number where we can reach you. If your address or telephone number changes, it is your responsibility to notify us immediately or your claim could be closed.

The Prevailing Wage Complaint Form (PDF) can be downloaded here.

CONTACT US

Division of Industrial Compliance & Labor
6606 Tussing Road
Reynoldsburg, OH 43068

Phone 614.644.2223
Fax 614.644.2618
Email IC@com.state.oh.us

Webmaster
Contact the Webmaster for Questions or Comments on the Website:
webmaster@com.state.oh.us

Copyright©2012 Ohio Department of Commerce. All Rights Reserved.

INSTRUCTIONS FOR PREPARING CERTIFIED PAYROLL REPORTS

General

Contractors and subcontractors are required by law to submit certified payroll reports for work on projects covered by Ohio's Prevailing Wage Law. This form meets the reporting requirements established by Ohio Revised Code Chapter 4115. The use of this form is not mandatory, employers may submit their own forms provided that all of the required information is included. This form may be reproduced, or additional copies obtained from:

Ohio Department of Commerce Division of Industrial Compliance and Labor Bureau of Wage & Hour Administration 6606 Tussing Rd. P. O. Box 4009 Reynoldsburg, OH 43068-9009 Phone: (614) 644-2239

Certified Payroll Heading

Employer name and address: Company's full name and address. Indicate if the company is a subcontractor, if so list the name of the General or Prime. Project: Name and location of the project, including county. Contracting Public Authority: Name and address of the contracting public authority. Week Ending: Month, day, and year for last day of reporting period. Payroll # : Indicates first, second, third, etc. payroll filed by the company for the project. Page Indicator: number of pages included in the report. Project Number: Determined by the public authority. If there is no number leave blank.

Information by Column

- 1. Employee Name, Address and Social Security number: This information must be provided for all employees that perform physical labor on the project. Corporate officers, partners, and salaried employees are considered employees and must be paid the prevailing rate. Individual sole proprietors do not have to pay themselves prevailing rate but must report their hours on the project.
- 2. Work Class: List classification of work actually performed by employee. If unsure of work classification, consult the Ohio department of Commerce, Wage and Hour Bureau. Employees working more than one classification should have separate line entries for each classification. Indicate what year/level for Apprentices. Be specific when using laborer and operator classifications; for example, Backhoe Operator or Asphalt Laborer.
- 3. Hours Worked, Day & Date: In the first row of column 3 enter days of pay period example; M T W TH F S S. The second row is for the date that corresponds with each day for the pay period. In the employee information section enter the number of hours worked on the prevailing wage project and which day the hours were worked. Separate rows are labeled for (ST) straight time hours and (OT) overtime hours. All hours worked after 40, must be paid at the appropriate overtime rate.
- 4. Project Total Hours : Total the hours entered for pay period.
- 5. Base Rate: Enter actual rate per hour paid to the employee. The overtime hourly rate is time and one-half the base rate listed in the prevailing wage schedule plus fringe benefits at straight time rate. The prevailing wage schedule lists the base rate plus fringe benefit amounts. These amounts added together equal the total prevailing wage rate. Employers must pay this total amount in one of three ways.
  - Total rate may be paid in entirety in the base rate to the employee; in which case, the cash designation will be checked for fringe benefits.
  - Total rate may be paid as listed in prevailing wage rate schedule with total fringe amounts paid approved plans.
  - Total rate may be paid with a combination of base rate and fringe payments to approved plans in amounts other than those listed in schedule.
- 6. Project Gross: Enter total gross wages earned on the project for straight time and overtime. Project hours X base rate should equal project gross.
- 7. Fringes: If fringe benefits are paid in the hourly base rate, indicate this by marking the cash space. If fringe benefits are paid to approved plans as listed in the prevailing wage rate schedule, mark the space Approved Plans. If fringe benefits are paid partially in the base rate and partially to approved plans, mark the space Cash & Approved plans. List the hourly amount paid to approved plans for each fringe. If payments are not made on a per hour basis, calculate the hourly fringe credit by dividing the yearly employer contribution by the lesser of: hours actually worked in the year (these must be documented) or 2080. Fringe benefits include: Employer's share of health insurance, life insurance, retirement plan, bonus/profit sharing, sick pay, holiday pay, personal leave, vacation, and education/training programs.
- 8. Total Hours All Jobs: Total all hours worked during the pay period including non-prevailing wage jobs.
- 9. Total Gross All Jobs: Gross amount earned in the pay period for all hours worked.
- 10. Self explanatory.
- 11. Self explanatory.
- 12. Self explanatory.

CONTACT US

Division of Industrial Compliance & Labor
6606 Tussing Road
Reynoldsburg, OH 43068

Phone 614.644.2223
Fax 614.644.2618
Email IC@com.state.oh.us

Webmaster
Contact the Webmaster for Questions or Comments on the Website:
webmaster@com.state.oh.us

CONNECT WITH US

LOOKUP SERVICES

Registered Contractor List
Boiler Information Database
Building Code Compliance Electronic Plan Submission
Board Of Building Appeals Case Lookup
Elevator Database Lookup

RESOURCES

Federal Wage and Hour
U.S. Consumer Product Safety Commission
National Electric, Fire Alarm and Sprinkler Codes
Minor Labor Law Poster
2017 Minimum Wage Poster
2018 Minimum Wage Poster

ABOUT INDUSTRIAL COMPLIANCE

Director Sheryl Maxfield
Interim Superintendent Geoff Eaton

Ohio.gov

Copyright©2012 Ohio Department of Commerce. All Rights Reserved.

Ohio | Department of Commerce

Division of Industrial Compliance

John R. Kasich, Governor
Jacqueline T. Williams, Director

Bureau of Wage and Hour Administration
6606 Tussing Road - PO Box 4009
Reynoldsburg, OH 43608-9009
Phone 614-644-2239 | Fax 614-728-8639
TTY/TDD 800-750-0750
com.ohio.gov
An Equal Opportunity Employer and Service Provider

PREVAILING WAGE CONTRACTOR RESPONSIBILITIES

This is a summary of prevailing wage contractors' responsibilities. For more detailed information please refer to Chapter 4115 of the Ohio Revised Code

General Information

Ohio's prevailing wage laws apply to all public improvements financed in whole or in part by public funds when the total overall project cost is fairly estimated to be more than $250,000 for new construction or $75,000 for reconstruction, enlargement, alteration, repair, remodeling, renovation, or painting.

Ohio's prevailing wage laws apply to all public improvements financed in whole or in part by public funds when the total overall project cost is fairly estimated to be more than $91,150 for new construction that involves roads, streets, alleys, sewers, ditches and other works connected to road or bridge construction or $27,309 for reconstruction, enlargement, alteration, repair, remodeling, renovation, or painting of a public improvement that involves roads, streets, alleys, sewers, ditches and other works connected to road or bridge construction.

a) Thresholds are to be adjusted biennially by the Administrator of Ohio Department of Commerce, Division of Industrial Compliance and Labor, Bureau of Wage and Hour Administration

b) Biennial adjustments to threshold levels are made according to the Price Deflator for Construction Index, United States Department of Commerce, Bureau of the Census*, but may not increase or decrease more than 3% for any year

Penalties for violation

Violators are to be assessed the wages owed, plus a penalty of 100% of the wages owed.

Intentional Violations

If an intentional violation is determined to have occurred, the contractor is prohibited from contracting directly or indirectly with any public authority for the construction of a public improvement. Intentional violation means "a willful, knowing, or deliberate disregard for any provision" of the prevailing wage law and includes but is not limited to the following actions:

- Intentional failure to submit payroll reports as required, or knowingly submitting false or erroneous reports.
- Intentional misclassification of employees for the purpose of reducing wages.
- Intentional misclassification of employees as independent contractors or as apprentices.
- Intentional failure to pay the prevailing wage.
- Intentional failure to comply with the allowable ratio of apprentices to skilled workers as required by the regulations established by Ohio Department of Commerce, Division of Industrial Compliance and Labor, Bureau of Wage and Hour Administration.
- Intentionally employing an officer, of a contractor or subcontractor, that is known to be prohibited from contracting, directly or indirectly, with a public authority.

Responsibilities

A. Pay the prevailing rate of wages as shown in the wage rate schedules issued by the Ohio Department of Commerce, Division of Industrial Compliance and Labor, Bureau of Wage and Hour Administration, for the classification of work being performed.

1. Wage rate schedules include all modifications, corrections, escalations, or reductions to wage rates issued for the project.

2. Overtime must be paid at time and one-half the employee's base hourly rate. Fringe benefits are paid at straight time rate for all hours including overtime.
3. Prevailing wages must be paid in full without any deduction for food, lodging, transportation, use of tools, etc.; unless, the employee has voluntarily consented to these deductions in writing. The public authority and the Director of Ohio Department of Commerce, Division of Industrial Compliance and Labor, Bureau of Wage and Hour Administration - must approve these deductions as fair and reasonable. Consent and approval must be obtained before starting the project.

B. Use of Apprentices and Helpers cannot exceed the ratios permitted in the wage rate schedules.
1. Apprentices must be registered with the U.S. Department of Labor Bureau of Apprenticeship and Training.
2. Contractors must provide the Prevailing Wage Coordinator a copy of the Apprenticeship Agreement for each apprentice on the project.

C. Keep full and accurate payroll records available for inspection by any authorized representative of the Ohio Department of Commerce, Division of Industrial Compliance, and Labor, Bureau of Wage and Hour Administration or the contracting public authority, including the Prevailing Wage Coordinator. Records should include but are not limited to:
1. Time cards, time sheets, daily work records, etc.
2. Payroll ledger\journals and canceled checks\check register.
3. Fringe benefit records must include program, address, account number, & canceled checks.
4. Records made in connection with the public improvement must not be removed from the State for one year following the completion of the project.
5. Out-of-State Corporations must submit to the Ohio Secretary of State the full name and address of their Statutory Agent in Ohio.

D. Prevailing Wage Rate Schedule must be posted on the job site where it is accessible to all employees.

E. Prior to submitting the initial payroll report, supply the Prevailing Wage Coordinator with your project dates to schedule reporting of your payrolls.

F. Supply the Prevailing Wage Coordinator a list of all subcontractors including the name, address, and telephone number for each.
1. **Contractors are responsible for their subcontractors' compliance with requirements of Chapter 4115 of the Ohio Revised Code.**

G. Before employees start work on the project, supply them with written notification of their job classification, prevailing wage rate, fringe benefit amounts, and the name of the Prevailing Wage Coordinator for the project. A copy of the completed signed notification should be submitted to Prevailing Wage Coordinator.

H. Supply all subcontractors with the Prevailing Wage Rates and changes.

I. Submit certified payrolls within two (2) weeks after the initial pay period. Payrolls must include the following information:
1. Employees' names, addresses, and social security numbers.
   (a) Corporate officers/owners/partners and any salaried personnel who do physical work on the project are considered employees. All rate and reporting requirements are applicable to these individuals.
2. Employees' work classification.
   (a) Be specific about the laborers and/or operators (Group)
   (b) For all apprentices, show level/year and percent of journeyman's rate
3. Hours worked on the project for each employee.

(a) The number of hours worked in each day and the total number of hours worked each week.

4. Hourly rate for each employee.
   (a) The minimum rate paid must be the wage rate for the appropriate classification. The Department's Wage Rate Schedule sets this rate.
   (b) All overtime worked is to be paid at time and one-half for all hours worked more than forty (40) per week.
5. Where fringes are paid into a bona fide plan instead of cash, list each benefit and amount per hour paid to program for each employee.
   (a) When the amount contributed to the fringe benefit plan and the total number of hours worked by the employee on all projects for the year are documented, the hourly amount is calculated by dividing the total contribution of the employer by the total number of hours worked by the employee.
   (b) When the amount contributed to the fringe benefit is documented but not the total hours worked, the hourly amount is calculated by **dividing the total yearly contribution by 2080**.
6. Gross amount earned on all projects during the pay period.
7. Total deductions from employee's wages.
8. Net amount paid.

J. The reports shall be certified by the contractor, subcontractor, or duly appointed agent stating that the payroll is correct and complete; and that the wage rates shown are not less than those required by the O.R.C. 4115.

K. Provide a Final Affidavit to the Prevailing Wage Coordinator upon the completion of the project.

PREVAILING WAGE THRESHOLD LEVELS
IMPORTANT NOTICE

Before advertising for bids, contracting, or undertaking construction with its own forces, to construct a public improvement, the Public Authority shall have the Ohio Department of Commerce-Division of Industrial Compliance, Bureau of Wage and Hour Administration determine the prevailing rates of wages for workers employed on the public improvement. The wage determination must be included in the project specifications and printed on the bidding blanks where work is done by contract.

"New" construction threshold for *Building* Construction:	**$250,000**

"Reconstruction, enlargement, alteration, repair, remodeling, renovation, or painting" threshold level for *Building* Construction:	**$75,000**

As of January 1, 2018:

"New" construction that involves *roads, streets, alleys, sewers, ditches and other works connected to road or bridge construction* threshold level has been adjusted to:	**$91,150**

"Reconstruction, enlargement, alteration, repair, remodeling, renovation, or painting" that involves *roads, streets, alleys, sewers, ditches and other works connected to road or bridge construction* threshold level has been adjusted to:	**$27,309**

A) Thresholds are to be adjusted biennially by the Director of the Ohio Department of Commerce.
B) Biennial adjustments to threshold levels are made according to the Building Cost for Skilled Labor Index published by McGraw-Hill's Engineering News-Record, but may not increase or decrease more than 3% for any year.

If there are questions concerning this notification, please contact:

Ohio Department of Commerce
Division of Industrial Compliance
Bureau of Wage and Hour Administration
6606 Tussing Road, PO Box 4009
Reynoldsburg, Ohio 43068-9009
Phone: 614-644-2239
Fax: 614-728-8639
www.com.ohio.gov

Department of Commerce

Division of Industrial Compliance
John R. Kasich, Governor
Jacqueline T. Williams, Director

Instructions for Filing a Minimum Wage Complaint

There is no cost in having a valid complaint investigated by our office. Please be advised, we cannot provide legal advice or act as your attorney. Also, please note, this office is only able to pursue minimum wage for the hours that are found to be unpaid. You also have the option of pursing your complaint privately or you may wish to contact an attorney. However, you cannot pursue your complaint through both processes at the same time.

After reviewing the guidelines below, if you believe that your situation falls within our investigatory limitations, you may file a complaint with our office.

The Bureau of Wage and Hour Administration investigates complaints involving the following:

- Minimum wage not being paid,
- Overtime not being paid,
- Unauthorized deductions, and
- Last paychecks being held.

We cannot collect wages owed for the any of the following reasons:

- Vacation pay,
- Sick leave,
- Holidays, or
- Other employment benefits promised to you.

In addition, we cannot investigate a complaint if you believe you were improperly terminated or if your employer did not properly withhold taxes, social security, etc.

In order to file a complaint, please follow these steps:

1. Fill in the form completely using black or blue ink. Please print legibly.

2. Provide copies, NOT originals, of the following; pay stubs, time sheets and any other records that will help prove your claim.

3. Use a separate sheet of paper to explain your situation, if needed.

4. Please have your signature notarized.

5. If you wish to remain anonymous, please indicate that by selecting the correct boxes on the form. Please note, you will remain anonymous until such time that wages are to be paid.

6. Submit the completed complaint form and your records to:

   Division of Industrial Compliance
   Bureau of Wage and Hour Administration,
   6606 Tussing Road
   Reynoldsburg, OH 43068

Please note, a complaint will be rejected if it does not contain complete and sufficient information. A compliant may also be rejected depending on your employment status (i.e. an exempt employee).

Department of Commerce

Division of Industrial Compliance

John R. Kasich, Governor
Jacqueline T. Williams, Director

MINIMUM WAGE COMPLAINT

Current Status With this Employer:	**DO NOT WRITE IN THIS AREA**	
Present employee of business? ☐Yes ☐No	Case #_____	
Former employee of business? ☐Yes ☐No	Approved ☐Yes ☐No	
Reason for filing complaint:	Rejected ☐Yes ☐No	
☐Minimum wage not paid ☐ Overtime not paid	Denied ☐Yes ☐No	
☐ Unpaid wages ☐ Last pay not received	County	Investigator
☐ Other (Explain in comments section below)	Comments:	

INCOMPLETE FORMS WILL BE RETURNED

EMPLOYER INFORMATION	Name			
Telephone	Address			
Email/Website	City	State	Zip	County
Type of Business	Number of Employees ☐ 0-5 ☐ 10 - 25 ☐ 50 - 75 ☐ 100 Plus			
Owner's name	Supervisor's name and title			
Is the business still operating? ☐Yes ☐No Business is _____ Over / _____ Under $500,000. per year	Has the business filed bankruptcy? ☐Yes ☐No			
COMPLAINANT/EMPLOYEE INFORMATION Employees should include copies of pay stubs, time cards, or any other documents that will assist in our investigation	Name			
Telephone	Address			
Other telephone numbers where you can be reached:	City	State	Zip	County
Email	☐ Yes, I authorize the use of my name ☐ No, I do not authorize the use of my name			

Are you over 18 years old? ☐Yes ☐No	How long did you work there? _____ From ___/___/___ To ___/___/___	What position did you hold?

WAGE PAYMENTS		**Are any part of these wages for?**	
☐Hourly? Amount_____	☐Weekly?	Bonus	☐Yes ☐No
☐Salary? Amount_____	☐Bi-weekly?	Commission	☐Yes ☐No
☐Overtime? Amount_____	☐Monthly?	Vacation/Holiday Pay/Sick Leave	☐Yes ☐No
Were tips received?	☐Yes ☐No	Do you owe your employer for advances, loans, merchandise, etc.	☐Yes ☐No
If yes, was at least $30 in tips reported each week?	☐Yes ☐No	If yes, amount owed:	$_____
Were you employed:			
In outside sales?	☐Yes ☐No	Did employer keep time records?	☐Yes ☐No
In a managerial/supervisory position?	☐Yes ☐No	Were you paid in cash?	☐Yes ☐No
By a governmental agency?	☐Yes ☐No	Did employer keep wage records?	☐Yes ☐No
In a professional position?	☐Yes ☐No	Do you have your own record of hours worked?	☐Yes ☐No
In interstate commerce?	☐Yes ☐No		
HOW MUCH ARE YOU OWED? $_____			
TIME PERIOD From _____/_____/_____ To _____/_____/_____			

NUMBER OF HOURS WAGES CLAIMED FOR _____	Were deductions for taxes, etc. withheld? ☐Yes ☐No If yes, were amounts listed on pay stubs? ☐Yes ☐No

ADDITIONAL COMMENTS:

_____

_____

_____

_____

_____

Please Attach Additional Sheets If Necessary

ATTACH ANY INFORMATION TO SUBSTANTIATE YOUR CLAIM. UNSUBSTANTIATED CLAIMS MAY BE RETURNED.

SPECIAL NOTICE

I _____, on this day _____

☐ **Do**

☐ **Do Not**

Assign to the Ohio Department of Commerce all rights, title, and interest to my claim for wages against _____.
(Employer)

In assigning these rights, I am aware that I must submit written notice of any change in my representational status.

☐ Yes, I authorize the use of my name

☐ No, I do not authorize the use of my name

Signature date

SIGNATURE & NOTARY

Complaints will be returned if not complete & signed

Affiant is further informed that Section 2921.13 of the Ohio Revised Code provides a penalty of a misdemeanor of the first degree and that prosecution will be pursued of those persons who "knowingly swear or affirm the truth of a false statement when… the statement is sworn or affirmed before a notary public…"

Sworn to before me and subscribed by the said:

In my presence this _____day of _____20____

_____Notary Public

I hereby certify that this is a true statement to the best of my knowledge and belief.

Signature date

Return to:

Ohio Department of Commerce
Division of Industrial Compliance
Bureau of Wage & Hour Administration
6606 Tussing Road, P.O. Box 4009
Reynoldsburg, OH 43068 - 9009
614-644-2239 Fax 614-644-8639

(Revised 9/30/11)

An Equal Opportunity Employer and Service Provider

*** INCOMPLETE FORMS WILL BE RETURNED ***

STATE OF OHIO
REQUEST FOR PREVAILING WAGE RATES

Important: If you wish to retain a copy of this form for your records, please print it prior to clicking on the "Submit" button. When you click the "Submit" button, a prompt should appear which will allow you to obtain the necessary wage rates by clicking on the "view wage rates" button. Submitting this form notifies the Bureau of Labor and Worker Safety of your project. Wage rates will not be sent to you by mail as a result of the submission, rather you should obtain them by clicking on the "view wage rates" button.

Public Authority Information

Owner/Public Authority Name:	Brunswick Hills Township	**Date: 02/20/2019** This form must be filled out completely & correctly for us to process your request. Forms not completed correctly will be returned to the sender.
Department Division or Agency:	Service Department	
Street Address:	1918 Pearl Road	
Address 2:		ODOC Date Stamp
City, OH	Brunswick, Ohio	
ZIP:	44212	
Email:	pmagovac@brunswickhil It is required that you list your e-mail address here.	
County of Public Authority:	MEDINA	
P.A. Phone:	3302204784	

Project Information

Project Name:	2018 Road Resurfacing	ODOC Date Stamp (Bld Tab)
Site Address:	Various roads throughtout the township	
City, OH	Brunswick Hills, Ohio	
ZIP:	44212	
County of Project:	MEDINA	
Prevailing Wage Coordinator Name	Kathrine Esber	
Address:	1918 Pearl Road	
City,	Brunswick, Ohio	
ZIP:	44212	
Phone:	330 225 2211	
Issuing Authority of Bonds:		

Estimated Total Overall Project Cost:	$135,000.00	
Type of Financing:	Check	
Type of Construction:	○ New Construction ○ Old Construction	
This Project is	○ Residential ○ Commercial	
Expected Date of Contract Award:	4/15/19 **example 05/31/98**	
Projected Completion Date:	10/1/19 **example 05/31/98**	
Project Comments:	(optional)	

Important: If you wish to retain a copy of this form for your records, please print it prior to clicking on the "Submit" button. When you click the "Submit" button, a prompt should appear which will allow you to obtain the necessary wage rates by clicking on the "view wage rates" button. Submitting this form notifies the Bureau of Labor and Worker Safety of your project. Wage rates will not be sent to you by mail as a result of the submission, rather you should obtain them by clicking on the "view wage rates" button.

Submit

Please contact our Webmaster with questions or comments.

LAW 1002

Prevailing Wage Rate
Skilled Crafts

Name of Union: Asbestos Local 207 OH

Change # : LCN01-2018fbLoc207OH

Craft : Asbestos Worker Effective Date : 08/23/2018 Last Posted : 08/23/2018

	BHR	Fringe Benefit Payments						Irrevocable Fund		Total PWR	Overtime Rate
		H&W	Pension	App Tr.	Vac.	Annuity	Other	LECET (*)	MISC (*)		
Classification											
Asbestos Abatement	$25.50	$7.25	$6.45	$0.65	$0.00	$0.00	$0.07	$0.00	$0.00	$39.92	$52.67
Trainee	$16.50	$7.25	$1.50	$0.65	$0.00	$0.00	$0.07	$0.00	$0.00	$25.97	$34.22

Special Calculation Note :

Ratio :

3 Journeymen to 1 Trainee

Jurisdiction (* denotes special jurisdictional note) :

ADAMS, ASHLAND, ASHTABULA*, ATHENS, AUGLAIZE, BROWN, BUTLER*, CARROLL, CHAMPAIGN, CLARK, CLERMONT, CLINTON, COLUMBIANA, COSHOCTON, CRAWFORD, CUYAHOGA, DARKE, DELAWARE, FAIRFIELD, FAYETTE, FRANKLIN, GEAUGA, GREENE, GUERNSEY, HAMILTON, HARDIN, HARRISON, HIGHLAND, HOCKING, HOLMES, HURON, KNOX, LAKE, LICKING, LOGAN, LORAIN, MADISON, MAHONING, MARION, MEDINA, MIAMI, MONTGOMERY, MORGAN, MORROW, MUSKINGUM, NOBLE, PERRY, PICKAWAY, PORTAGE, PREBLE, RICHLAND, ROSS, SHELBY, STARK, SUMMIT, TRUMBULL, TUSCARAWAS, UNION, VINTON, WARREN*, WAYNE

Special Jurisdictional Note : Butler County:(townships of Fairfield,Hanover,Liberty,Milford,Morgan,Oxford,Ripley,Ross,StClair,Union & Wayne.) (Lemon & Madison) Warren County: (townships of: Deerfield, Hamilton, Harlan, Salem, Union & Washington). (Clear Creek, Franklin, Mossie, Turtle Creek & Wayney). Ashtabula County: (post offices & townships of Ashtabula, Austinburg, Geneva, Harperfield, Jefferson, Plymouth & Saybrook) (townships of Andover, Cherry Valley, Colbrook, Canneaut, Denmark, Dorset, East Orwell, Hartsgrove, Kingville, Lenox, Monroe,Morgan,New

CITY OF BRUNSWICK, OHIO
RESOLUTION NO. 46-19

BY: Mrs. Rodriguez, Mr. Capretta, and Mr. Hanek

A RESOLUTION AUTHORIZING DIRECT PAYMENT TO MELWAY PAVING COMPANY, INC. FOR THE CITY'S PROPORTIONATE SHARE OF THE LAUREL ROAD AND SOUTH CARPENTER ROAD RESURFACING PROJECT.

WHEREAS: On December 10, 2018, City Council adopted Resolution No. 102-18 pledging cooperation with the Medina County Engineer and Brunswick Hills Township for the resurfacing of Laurel Road and South Carpenter Road (the "Project") in an amount not to exceed $120,000.00 for the portion of the Project located in the City;

WHEREAS: The Medina County Engineer prepared the bid package, bid the Project, opened the five (5) received public bids and prepared the bid tabulation;

WHEREAS: Upon review of the bid tabulation, Brunswick Hills Township awarded the Contract for the Project to Melway Paving Company, Inc. as the lowest and best bidder; and

WHEREAS: Brunswick Hills Township has requested that the City pay the City's proportionate share of the Project directly to Melway Paving Company, Inc.

WHEREAS: THE COUNCIL OF THE CITY OF BRUNSWICK HEREBY RESOLVES:

SECTION 1: That direct payment to Melway Paving Company, Inc. for the City's proportionate share of the Project is hereby authorized, in an amount not to exceed $120,000.00, upon final inspection approval of the Project and certification of the City's proportionate share.

SECTION 2: That this Resolution shall take effect and be in force from and after the earliest period allowed by law.

PASSED: 1st Reading_____

2nd Reading_____

3rd Reading_____

ADOPTED: _____ AYES _____ NAYS _____

ATTEST: _____
Clerk of Council
Fijabi Julien-Gallam, CMC

CITY OF BRUNSWICK, OHIO
RESOLUTION NO. _____

BY:

A RESOLUTION AUTHORIZING DIRECT PAYMENT TO MELWAY PAVING COMPANY, INC. FOR THE CITY'S PROPORTIONATE SHARE OF THE LAUREL ROAD AND SOUTH CARPENTER ROAD RESURFACING PROJECT.

WHEREAS: On December 10, 2018, City Council adopted Resolution No. 102-18 pledging cooperation with the Medina County Engineer and Brunswick Hills Township for the resurfacing of Laurel Road and South Carpenter Road (the "Project") in an amount not to exceed $120,000.00 for the portion of the Project located in the City;

WHEREAS: The Medina County Engineer prepared the bid package, bid the Project, opened the five (5) received public bids and prepared the bid tabulation;

WHEREAS: Upon review of the bid tabulation, Brunswick Hills Township awarded the Contract for the Project to Melway Paving Company, Inc. as the lowest and best bidder; and

WHEREAS: Brunswick Hills Township has requested that the City pay the City's proportionate share of the Project directly to Melway Paving Company, Inc.

WHEREAS: THE COUNCIL OF THE CITY OF BRUNSWICK HEREBY RESOLVES:

SECTION 1: That direct payment to Melway Paving Company, Inc. for the City's proportionate share of the Project is hereby authorized, in an amount not to exceed $120,000.00, upon final inspection approval of the Project and certification of the City's proportionate share.

SECTION 2: That this Resolution shall take effect and be in force from and after the earliest period allowed by law.

PASSED: 1st Reading_____

2nd Reading_____

3rd Reading_____

ADOPTED: _____ AYES _____ NAYS _____

ATTEST: _____
Clerk of Council
Fijabi Julien-Gallam, CMC

THE CITY OF BRUNSWICK

PROPOSED LEGISLATION

DATE: 7/8/2019

TO: Vice Mayor Michael Abella Jr. and Members of City Council

FROM: Carl S. DeForest, City Manager
Grant Aungst

COPY: Mayor Ron Falconi

LEGISLATION: **ORD, NO. 47-19** - An ordinance approving the Vicky Drive Extension Single Family Cluster Development Preliminary Subdivision Plan subject to any conditions recommended by the Planning Commission and any other conditions imposed by council. - **1st Reading** (To be brought from Planning & Zoning Committee, *Administration/Grant Aungst*)

BACKGROUND: At their meeting on June 20, 2019, the Planning Commission held a public hearing and recommended approval to City Council of the Vicky Drive extension single family cluster development consisting of fifteen (15) lots on the western 12.03 acres of the 25-acre parcel located at 834 Pearl Road (Permanent Parcel #003-18A-04-193), attached as Exhibit "A".

PURPOSE AND EXPLANATION: Pending approval by City Council of the rezoning from the R-R Rural Residential District to the R-L Low Density Residential District, the developer is seeking to construct a single family cluster development consisting of fifteen (15) lots.

IMPLEMENTATION SCHEDULE: Immediately.

FINANCIAL INFORMATION:

FINANCIAL SUMMARY:

RECOMMENDED ACTION:

One Reading	No
Two Readings	No
Three Readings	Yes
Emergency	No
Suspension of Rules	No

If emergency or suspension of the rules, why the request?
Move to second reading.

ADDITIONAL INFORMATION:

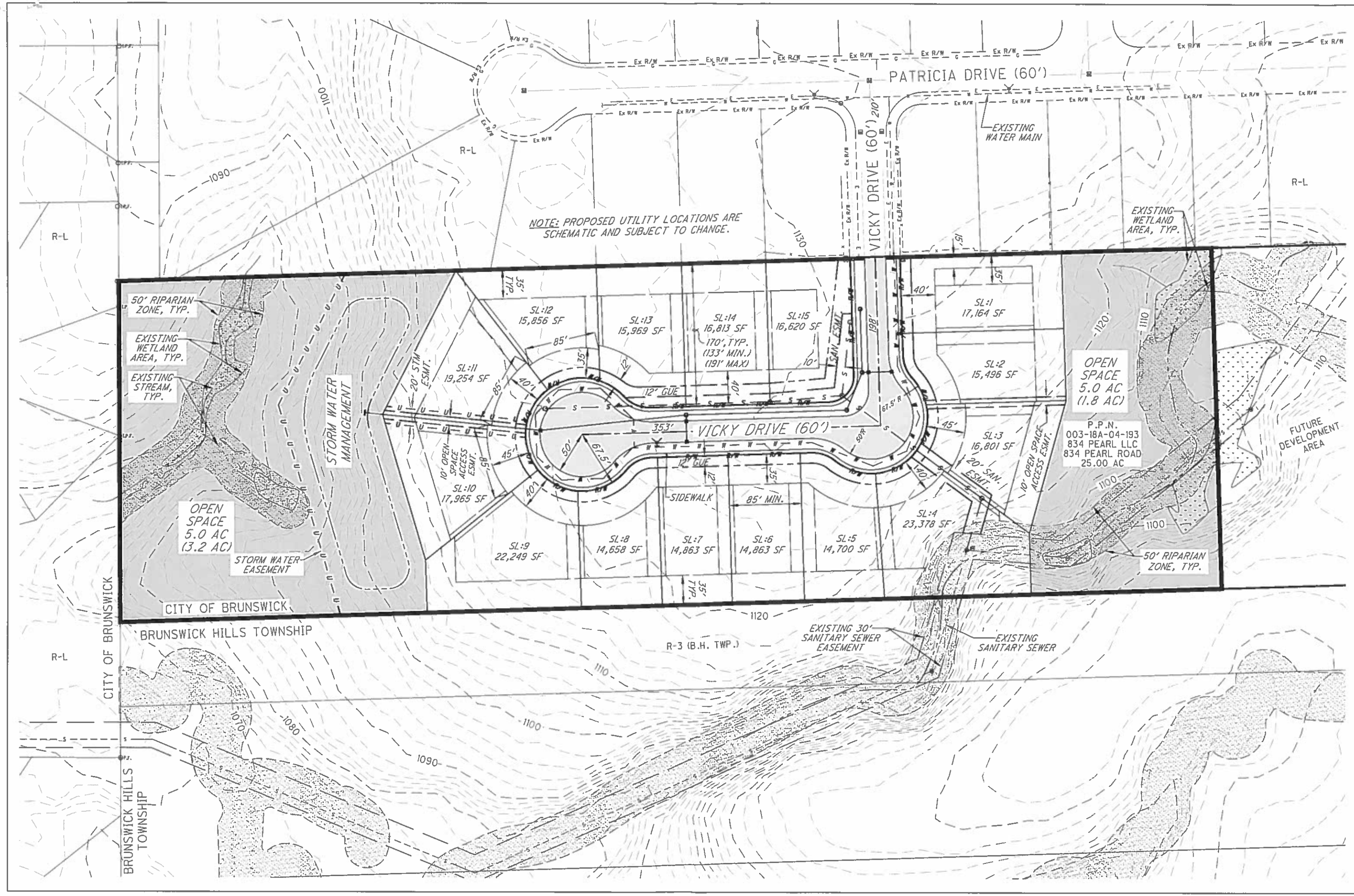

TGC Engineering, LLC
1320 SHARON COPLEY ROAD, P.O. BOX 37
SHARON CENTER, OHIO 44274
(PHONE) 330.238.8234 (FAX) 888.852.4242

SCALE (IN FEET)
1 inch = 50 ft.

VICKY DRIVE EXTENSION
DETAILED SITE PLAN

PROJECT NUMBER
1972
DATE
2019-05-09

2/2

CITY OF BRUNSWICK, OHIO
ORDINANCE NO. _____

BY:

AN ORDINANCE APPROVING THE VICKY DRIVE EXTENSION SINGLE FAMILY CLUSTER DEVELOPMENT PRELIMINARY SUBDIVISION PLAN SUBJECT TO ANY CONDITIONS RECOMMENDED BY THE PLANNING COMMISSION AND ANY OTHER CONDITIONS IMPOSED BY COUNCIL.

WHEREAS: At a public hearing held on June 20, 2019, the Brunswick City Planning Commission recommended approval to City Council of a Preliminary Subdivision Plan for the Vicky Drive Extension Single Family Cluster Development.

WHEREAS: THE COUNCIL OF THE CITY OF BRUNSWICK HEREBY ORDAINS:

SECTION 1: That the Preliminary Subdivision Plan for the Vicky Drive Extension Single Family Cluster Development, as attached hereto as Exhibit "A", is hereby approved subject to any conditions enumerated by the Planning Commission and any other conditions imposed by this Council.

SECTION 2: That this Ordinance shall take effect and be in force from and after the earliest period allowed by law.

PASSED: 1st Reading_____

2nd Reading_____

3rd Reading_____

ADOPTED: _____ AYES _____ NAYS _____

ATTEST: _____
Clerk of Council
Fijabi Julien-Gallam, CMC

CITY OF BRUNSWICK, OHIO
ORDINANCE NO. __47-19__

BY: Mr. Delsanter, Mr. Hanek, and Mrs. Rodriguez

AN ORDINANCE APPROVING THE VICKY DRIVE EXTENSION SINGLE FAMILY CLUSTER DEVELOPMENT PRELIMINARY SUBDIVISION PLAN SUBJECT TO ANY CONDITIONS RECOMMENDED BY THE PLANNING COMMISSION AND ANY OTHER CONDITIONS IMPOSED BY COUNCIL

WHEREAS: At a public hearing held on June 20, 2019, the Brunswick City Planning Commission recommended approval to City Council of a Preliminary Subdivision Plan for the Vicky Drive Extension Single Family Cluster Development.

WHEREAS: THE COUNCIL OF THE CITY OF BRUNSWICK HEREBY ORDAINS:

SECTION 1: That the Preliminary Subdivision Plan for the Vicky Drive Extension Single Family Cluster Development, as attached hereto as Exhibit "A", is hereby approved subject to any conditions enumerated by the Planning Commission and any other conditions imposed by this Council.

SECTION 2: That this Ordinance shall take effect and be in force from and after the earliest period allowed by law.

PASSED: 1st Reading_____

2nd Reading_____

3rd Reading_____

ADOPTED: _____ AYES _____ NAYS _____

ATTEST: _____
Clerk of Council
Fijabi Julien-Gallam, CMC

THE CITY OF BRUNSWICK

PROPOSED LEGISLATION

DATE: 7/8/2019

TO: Vice Mayor Michael Abella Jr. and Members of City Council

FROM: Carl S. DeForest, City Manager
Grant Aungst

COPY: Mayor Ron Falconi

LEGISLATION: **ORD. NO. 48-19** - An ordinance rezoning the western 12.03 acres of PPN 003-18A-04-193 from the R-R Rural Residential District to the R-L Low Density Residential District.- **1st Reading** (To be brought from Planning & Zoning Committee, *Administration/Grant Aungst*)

BACKGROUND: At their meeting on June 20, 2019, the Planning Commission held a public hearing and recommended approval to City Council of the rezoning of the western 12.03 acres of the 25-acre parcel at 834 Pearl Road (PP# 003-18A-04-193) from the R-R Rural Residential District to the R-L Low Density Residential District, attached as Exhibit "A".

PURPOSE AND EXPLANATION: The 25-acre parcel located at 834 Pearl Road (PP #003-18A-04-193) was annexed into the city from Brunswick Hills Township on January 14, 2019 (Ordinance No. 1-19) and is currently in the R-R Rural Residential District as a holding zone, pursuant to Section 1248.08 of the Zoning Code. The developer is seeking to rezone the western 12.03 acres from the R-R District to the R-L Low Density Residential District in order to construct a single family cluster development consisting of fifteen (15) lots.

IMPLEMENTATION SCHEDULE: Immediately.

FINANCIAL INFORMATION:

FINANCIAL SUMMARY:

RECOMMENDED ACTION:

One Reading	No
Two Readings	No
Three Readings	Yes
Emergency	No
Suspension of Rules	No

If emergency or suspension of the rules, why the request?
Recommend moving to second reading.

ADDITIONAL INFORMATION:

MAP AMENDMENT APPLICATION PLAN

FOR

VICKY DRIVE EXTENSION

CITY OF BRUNSWICK, COUNTY OF MEDINA AND STATE OF OHIO

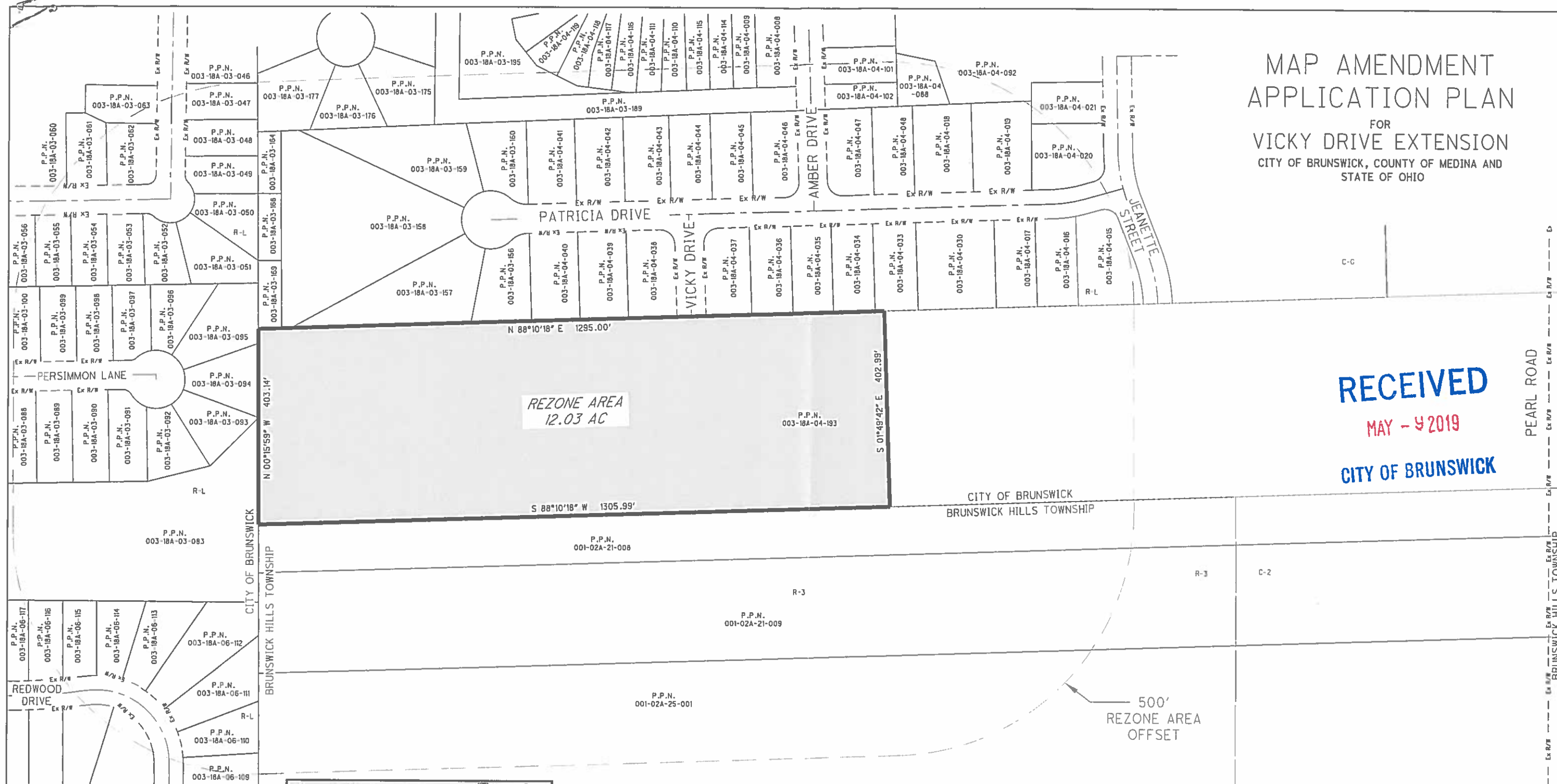

RECEIVED
MAY - 9 2019
CITY OF BRUNSWICK

LOCATION MAP

NO SCALE

OWNERS:

PARCEL: 030-18A-04-193
834 PEARL LLC
3660 CENTER ROAD
BRUNSWICK, OHIO 44212
KIM HARRINGTON
RYAN HARRINGTON
781-367-5378

DEVELOPER:

BROWNSTONE BUILDING AND REDEVELOPMENT LLC
3660 CENTER ROAD
BRUNSWICK, OHIO 44212
KIM HARRINGTON
RYAN HARRINGTON
781-367-5378

DESIGN ENGINEER:

TGC ENGINEERING, LLC
1310 SHARON COPLEY ROAD, P.O. BOX 37
SHARON CENTER, OHIO 44274
TRAVIS G. CRANE, P.E.
330-590-8004

SUBMITTAL INDEX	
SUBMITTAL	DATE
1	05/09/2019

DRAWN BY:	LMT	2019-05-07
CHECKED BY:	TGC	2019-05-07

TGC Engineering, LLC
1310 SHARON COPLEY ROAD, P.O. BOX 37
SHARON CENTER, OHIO 44274
(PHONE) 330.590.8004 (FAX) 888.820.3423

SCALE (IN FEET)
1 inch = 100 ft.

VICKY DRIVE EXTENSION
MAP AMENDMENT APPLICATION PLAN

PROJECT NUMBER
1972
DATE
2019-05-09

1 / 1

CITY OF BRUNSWICK, OHIO
ORDINANCE NO. _____

BY:

AN ORDINANCE REZONING THE WESTERN 12.03 ACRES OF PPN 003-18A-04-193 FROM THE R-R RURAL RESIDENTIAL DISTRICT TO THE R-L LOW DENSITY RESIDENTIAL DISTRICT.

WHEREAS: Upon application of the property owner to rezone the western 12.03 acres of the property known as PPN 003-18A-04-193 from the R-R Rural Residential District to the R-L Low Density Residential District, on June 20, 2019, the Planning Commission held a public hearing on the requested rezoning; and

WHEREAS: On June 20, 2019, the Planning Commission voted to recommend approval to City Council of the proposed rezoning of the western 12.03 acres of the property known as PPN 003-18A-04-193 from the R-R Rural Residential District to the R-L Low Density Residential District.

WHEREAS: THE COUNCIL OF THE CITY OF BRUNSWICK HEREBY ORDAINS:

SECTION 1: That upon application of the property owner, the western 12.03 acres of the property known as PPN 003-18A-04-193 is hereby rezoned from the R-R Rural Residential District to the R-L Low Density Residential District.

SECTION 2: Upon the effective date of this Ordinance, the City Engineer shall cause the Official Zoning Map of the City of Brunswick to be revised to reflect such rezoning.

SECTION 3: That this Ordinance shall take effect and be in force from and after the earliest period allowed by law.

PASSED: 1st Reading_____

2nd Reading_____

3rd Reading_____

ADOPTED: _____ AYES _____ NAYS _____

ATTEST: _____
Clerk of Council
Fijabi Julien-Gallam, CMC

CITY OF BRUNSWICK, OHIO
ORDINANCE NO. 48-19

BY: Mr. Delsanter, Mr. Hanek, and Mrs. Rodriguez

AN ORDINANCE REZONING THE WESTERN 12.03 ACRES OF PPN 003-18A-04-193 FROM THE R-R RURAL RESIDENTIAL DISTRICT TO THE R-L LOW DENSITY RESIDENTIAL DISTRICT.

WHEREAS: Upon application of the property owner to rezone the western 12.03 acres of the property known as PPN 003-18A-04-193 from the R-R Rural Residential District to the R-L Low Density Residential District, on June 20, 2019, the Planning Commission held a public hearing on the requested rezoning; and

WHEREAS: On June 20, 2019, the Planning Commission voted to recommend approval to City Council of the proposed rezoning of the western 12.03 acres of the property known as PPN 003-18A-04-193 from the R-R Rural Residential District to the R-L Low Density Residential District.

WHEREAS: THE COUNCIL OF THE CITY OF BRUNSWICK HEREBY ORDAINS:

SECTION 1: That upon application of the property owner, the western 12.03 acres of the property known as PPN 003-18A-04-193 is hereby rezoned from the R-R Rural Residential District to the R-L Low Density Residential District.

SECTION 2: Upon the effective date of this Ordinance, the City Engineer shall cause the Official Zoning Map of the City of Brunswick to be revised to reflect such rezoning.

SECTION 3: That this Ordinance shall take effect and be in force from and after the earliest period allowed by law.

PASSED: 1st Reading_____

2nd Reading_____

3rd Reading_____

ADOPTED: _____ AYES _____ NAYS _____

ATTEST: _____
Clerk of Council
Fijabi Julien-Gallam, CMC

THE CITY OF BRUNSWICK

PROPOSED LEGISLATION

DATE: 7/8/2019

TO: Vice Mayor Michael Abella Jr. and Members of City Council

FROM: Carl S. DeForest, City Manager

COPY: Mayor Ron Falconi

LEGISLATION: **RES. NO. 49-19** - A resolution declaring the City of Brunswick a "Purple Heart City." - **1st Reading** (To be brought from Committee-of-the-Whole, *Administration/Nicholas Hanek*)

BACKGROUND: The Purple Heart is the oldest military decoration in present use and was initially created as the Badge of Military Merit by General George Washington in 1782.

The Purple Heart was the first American service award or decoration made available to the common soldier and is specifically awarded to members of the Armed Forces who have been wounded or paid the ultimate sacrifice in combat with a declared enemy of the United States of America.

PURPOSE AND EXPLANATION: To declare the City of Brunswick as a "Purple Heart City" and encourage the citizens of the City of Brunswick to show their appreciation for the sacrifices that Purple Heart recipients have made in defending our freedoms, to acknowledge their courage and to show them the honor and support that they have earned.

Purple Heart Day will be observed on Wednesday, August 7, 2019.

IMPLEMENTATION SCHEDULE:

FINANCIAL INFORMATION:

FINANCIAL SUMMARY:

RECOMMENDED ACTION:

One Reading	No
Two Readings	Yes
Three Readings	No
Emergency	Yes
Suspension of Rules	Yes

If emergency or suspension of the rules, why the request?

ADDITIONAL INFORMATION:

CITY OF BRUNSWICK, OHIO
RESOLUTION NO. 49-19

BY: Committee-of-the-Whole

A RESOLUTION DECLARING THE CITY OF BRUNSWICK A "PURPLE HEART CITY."

WHEREAS: The City of Brunswick has always supported its military veteran population;

WHEREAS: The people of the City of Brunswick have great admiration and the utmost gratitude for all the men and women who have selflessly served this Country and community in the Armed Forces;

WHEREAS: Military veterans have paid the high price of freedom by leaving their families and communities and placing themselves in harm's way for the good of all;

WHEREAS: The contributions and sacrifices of the men and women from the City of Brunswick who served in the Armed Forces have been vital in maintaining the freedoms and way of life enjoyed by our citizens;

WHEREAS: Many men and women in uniform have given their lives while serving in the Armed Forces;

WHEREAS: The Purple Heart is the oldest military decoration in present use and was initially created as the Badge of Military Merit by General George Washington in 1782;

WHEREAS: The Purple Heart was the first American service award or decoration made available to the common soldier and is specifically awarded to members of the Armed Forces who have been wounded or paid the ultimate sacrifice in combat with a declared enemy of the United States of America;

WHEREAS: The mission of the Military Order of the Purple Heart is to foster an environment of goodwill among the combat wounded veteran members and their families, promote patriotism, support legislative initiatives, and most importantly make sure we never forget;

WHEREAS: The City of Brunswick has a large, highly decorated veteran population including many Purple Heart recipients; and

WHEREAS: The City of Brunswick appreciates the sacrifices of our Purple Heart recipients made in defending our freedoms and believe it is important that we acknowledge them for their courage and show them the honor and support that they have earned.

WHEREAS: THE COUNCIL OF THE CITY OF BRUNSWICK HEREBY RESOLVES:

SECTION 1: This Council does hereby declare the City of Brunswick as a "Purple Heart City"

and encourage the citizens of the City of Brunswick to show their appreciation for the sacrifices that Purple Heart recipients have made in defending our freedoms, to acknowledge their courage and to show them the honor and support that they have earned.

SECTION 2: This Council hereby designates August 7, 2019 as the day in the City of Brunswick to remember and recognize veterans who are recipients of the Purple Heart.

SECTION 3: That this Resolution shall take effect and be in force from and after the earliest period allowed by law.

PASSED: 1st Reading_____

2nd Reading_____

Rules Suspended: AYES _____ NAYS _____

ADOPTED: _____ AYES _____ NAYS _____

ATTEST: _____
Clerk of Council
Fijabi Julien-Gallam, CMC

THE CITY OF BRUNSWICK

PROPOSED LEGISLATION

DATE: 7/8/2019

TO: Vice Mayor Michael Abella Jr. and Members of City Council

FROM: Carl S. DeForest, City Manager
Paul Barnett

COPY: Mayor Ron Falconi

LEGISLATION: **RES. NO. 50-19** - An emergency resolution authorizing the City Manager to enter into an agreement with Perk Company, INC. for the Laurel Road Reconstruction Phase 2 project in an amount not to exceed $840,357.00. - **1st Reading** (To be brought from Services, Utilities, Technology & Cable Committee, *Administration/Matt Jones*)

BACKGROUND: Authorization for public bid granted by City Council motion on May 13, 2019.

PURPOSE AND EXPLANATION: The proposed project will remove and replace the existing deteriorated concrete pavement and base on Laurel Road from Brintnall Drive to Pinewood Drive. New aprons will be constructed at all affected driveways. Sidewalk will be removed and replaced as needed. Storm sewer crossovers and catch basins within the project limits will also be removed and replaced.

IMPLEMENTATION SCHEDULE: The project is anticipated to commence in August and be completed in November.

FINANCIAL INFORMATION: Construction cost accounts - - - 371-0553-56881 & 333-0553-56881 - -

FINANCIAL SUMMARY: This project is being partially funded with a $613,800.00 grant from the Ohio Public Works Commission. The OPWC portion will be accounted for in the OPWC Laurel Road Improvement Fund #371. The remaining costs will be funded out of the City's Road Improvement Fund #333.

Note: Pursuant to OPWC directive (see attached letter), construction may not begin until an executed Project Agreement is in place.

RECOMMENDED ACTION:

One Reading	Yes
Two Readings	No
Three Readings	No
Emergency	Yes

Suspension of Rules Yes

If emergency or suspension of the rules, why the request?
It is requested that legislation is passed by emergency measure with suspension of the rules for the immediate preservation of the public peace, property, health, safety, or welfare, and providing for the usual daily operation of a municipality, and for the further reason that this project may commence and be completed during the 2019 construction season.

ADDITIONAL INFORMATION:

Prepared by Chagrin Valley Engineering, Ltd.

BID TABULATION
LAUREL ROAD RECONSTRUCTION PHASE 2
CITY OF BRUNSWICK
DATE: JULY 3, 2019
CVE JOB NO. 18449 Engineer's Estimate $900,000.00

				PERK COMPANY, INC.			TRI MOR CORPORATION	
ITEM	DESCRIPTION	QTY	UNIT	UNIT PRICE	TOTAL PRICE		UNIT PRICE	TOTAL PRICE
1	PAVEMENT REMOVED	6,510	S.Y.	$15.60	$101,556.00		$15.00	$97,650.00
2	SUBGRADE COMPACTION	6,510	S.Y.	$1.30	$8,463.00		$0.50	$3,255.00
3	CONCRETE PAVEMENT WITH FIBROUS REINFORCING	6,510	S.Y.	$62.00	$403,620.00		$68.00	$442,680.00
4	6” FABRIC WRAPPED UNDERDRAIN	4,120	L.F.	$11.00	$45,320.00		$9.00	$37,080.00
5	CONCRETE DRIVE APRON- RESIDENTIAL	8,500	S.F.	$6.75	$57,375.00		$7.00	$59,500.00
6	CONCRETE DRIVE APRON - COMMERCIAL	350	S.F.	$7.00	$2,450.00		$8.00	$2,800.00
7	BASE STABILIZATION, #2 AGGREGATE	200	C.Y.	$30.00	$6,000.00		$40.00	$8,000.00
8	BASE STABILIZATION, #4 AGGREGATE	200	C.Y.	$30.00	$6,000.00		$40.00	$8,000.00
9	CONCRETE SIDEWALK	2,000	S.F.	$6.50	$13,000.00		$8.00	$16,000.00
10	CURB RAMP	200	S.F.	$21.00	$4,200.00		$18.00	$3,600.00
11	EXISTING CURB INLET REMOVED	1	EACH	$1,725.00	$1,725.00		$300.00	$300.00
12	STORM SEWER REMOVED, 24” AND UNDER	239	L.F.	$52.00	$12,428.00		$10.00	$2,390.00
13	12" STORM SEWER	239	L.F.	$80.00	$19,120.00		$75.00	$17,925.00
14	TWIN CATCH BASIN CB-3C2	1	EACH	$5,220.00	$5,220.00		$4,500.00	$4,500.00
15	EX. 8’ PVMT. INLET NO. 2A RECONSTRUCTED TO GRADE	2	EACH	$2,700.00	$5,400.00		$2,800.00	$5,600.00
16	EX. 10’ PVMT. INLET NO. 2A RECONSTRUCTED TO GRADE	3	EACH	$2,900.00	$8,700.00		$3,200.00	$9,600.00
17	EX. 12’ PVMT. INLET NO. 2A RECONSTRUCTED TO GRADE	6	EACH	$3,230.00	$19,380.00		$3,700.00	$22,200.00
18	EX. 14’ PVMT. INLET NO. 2A RECONSTRUCTED TO GRADE	2	EACH	$3,410.00	$6,820.00		$4,000.00	$8,000.00
19	EXISTING STORM MANHOLE ADJUSTED TO GRADE	1	EACH	$750.00	$750.00		$500.00	$500.00
20	EXISTING SANITARY MANHOLE ADJUSTED TO GRADE	5	EACH	$850.00	$4,250.00	*	$750.00	$3,750.00
21	WATER STOP BOX ADJUSTED TO GRADE	1	EACH	$2,000.00	$2,000.00		$100.00	$100.00
22	MISCELLANEOUS METAL	2,000	LBS	$1.25	$2,500.00		$1.25	$2,500.00
23	SURVEY MONUMENT AND MONUMENT BOX ASSEMBLY	5	EACH	$850.00	$4,250.00		$625.00	$3,125.00
24	LINEAR GRADING, TOPSOIL, SEEDING & MULCHING	1	LUMP	$37,800.00	$37,800.00		$20,000.00	$20,000.00
25	MAINTAINING TRAFFIC & DETOUR SIGNING	1	LUMP	$52,230.00	$52,230.00		$60,000.00	$60,000.00
26	PAVEMENT MARKING	1	LUMP	$4,800.00	$4,800.00		$6,550.00	$6,550.00
27	EROSION CONTROL	1	LUMP	$5,000.00	$5,000.00		$2,500.00	$2,500.00
	TOTAL PROJECT COST			**TOTAL**	**$840,357.00**		**TOTAL**	**$848,105.00**
	(Substantial Completion Required Within 95 Days of Issuance of Notice To Proceed)			DAYS TO COMPLETE: 95 DAYS			DAYS TO COMPLETE: 95 DAYS	

**Math Error. Actual Bid Submitted $837,807.00*

				FABRIZI TRUCKING & PAVING CO., INC.	
ITEM	DESCRIPTION	UNIT	UNIT	UNIT PRICE	TOTAL PRICE
1	PAVEMENT REMOVED	6,510	S.Y.	$17.00	$110,670.00
2	SUBGRADE COMPACTION	6,510	S.Y.	$1.00	$6,510.00
3	CONCRETE PAVEMENT WITH FIBROUS REINFORCING	6,510	S.Y.	$68.00	$442,680.00
4	6” FABRIC WRAPPED UNDERDRAIN	4,120	L.F.	$9.00	$37,080.00
5	CONCRETE DRIVE APRON- RESIDENTIAL	8,500	S.F.	$7.00	$59,500.00
6	CONCRETE DRIVE APRON - COMMERCIAL	350	S.F.	$8.50	$2,975.00
7	BASE STABILIZATION, #2 AGGREGATE	200	C.Y.	$45.00	$9,000.00
8	BASE STABILIZATION, #4 AGGREGATE	200	C.Y.	$45.00	$9,000.00
9	CONCRETE SIDEWALK	2,000	S.F.	$7.00	$14,000.00
10	CURB RAMP	200	S.F.	$15.00	$3,000.00
11	EXISTING CURB INLET REMOVED	1	EACH	$150.00	$150.00
12	STORM SEWER REMOVED, 24” AND UNDER	239	L.F.	$5.00	$1,195.00
13	12" STORM SEWER	239	L.F.	$85.00	$20,315.00
14	TWIN CATCH BASIN CB-3C2	1	EACH	$4,800.00	$4,800.00
15	EX. 8’ PVMT. INLET NO. 2A RECONSTRUCTED TO GRADE	2	EACH	$3,600.00	$7,200.00
16	EX. 10’ PVMT. INLET NO. 2A RECONSTRUCTED TO GRADE	3	EACH	$3,800.00	$11,400.00
17	EX. 12’ PVMT. INLET NO. 2A RECONSTRUCTED TO GRADE	6	EACH	$4,330.00	$25,980.00
18	EX. 14’ PVMT. INLET NO. 2A RECONSTRUCTED TO GRADE	2	EACH	$4,800.00	$9,600.00
19	EXISTING STORM MANHOLE ADJUSTED TO GRADE	1	EACH	$250.00	$250.00
20	EXISTING SANITARY MANHOLE ADJUSTED TO GRADE	5	EACH	$400.00	$2,000.00
21	WATER STOP BOX ADJUSTED TO GRADE	1	EACH	$100.00	$100.00
22	MISCELLANEOUS METAL	2,000	LBS	$1.25	$2,500.00
23	SURVEY MONUMENT AND MONUMENT BOX ASSEMBLY	5	EACH	$375.00	$1,875.00
24	LINEAR GRADING, TOPSOIL, SEEDING & MULCHING	1	LUMP	$22,000.00	$22,000.00
25	MAINTAINING TRAFFIC & DETOUR SIGNING	1	LUMP	$46,185.00	$46,185.00
26	PAVEMENT MARKING	1	LUMP	$5,500.00	$5,500.00
27	EROSION CONTROL	1	LUMP	$3,500.00	$3,500.00
	TOTAL PROJECT COST			**TOTAL**	**$858,965.00**
	(Substantial Completion Required Within 95 Days of Issuance of Notice To Proceed)			DAYS TO COMPLETE: 95 DAYS	

M E M O

Engineering Department

TO: City Council
FROM: Matthew M. Jones, P.E.
DATE: July 5, 2019
RE: Laurel Road Reconstruction Phase 2

On July 3, 2019, public bids were opened for the Laurel Road Reconstruction Phase 2 project. A tabulation of the bid results is attached for your reference. Three companies submitted bids for the project. The low bidder for the project was Perk Construction with a bid of $840,357.00. The Engineer's estimate was $900,000.00. Tri-Mor Corporation was the second low bidder at $848,105.00.

This project will facilitate the complete removal and replacement of the concrete pavement and base on Laurel Road from Brintnall Drive to Pinewood Drive. Also included in the scope of work is replacement of catch basins and storm sewer crossover pipes, installation of pipe underdrains, drive apron replacement, curb ramp replacement, and sidewalk repairs where needed. Also, contingency quantities are included in the bid for subgrade removal and replacement where needed.

CVE staff has contacted a sampling of references provided by Perk Construction. The reference check did not find any recurring issues with Perk. Three municipalities were contacted regarding three separate projects, and all classified Perk as an above average contractor. Additionally, Perk was the City's contractor on the Grafton Road Phase 3 project which was acceptably completed.

Based upon a review of the bid documents and other references, it is my opinion that Perk has the needed experience, personnel and equipment to successfully complete the work as bid and should be considered the lowest and best bidder for this project.

Therefore, I respectfully request that City Council consider emergency legislation to award a contract in the amount of $840,357.00 to Perk Construction to complete the Laurel Road Reconstruction Phase 2 project.

If you have any questions or require any additional information, please contact me at your convenience.

Attachments

C: Carl DeForest, City Manager
Paul Barnett, Service Director
Todd Fischer, Finance Director
Ken Fisher, Law Director

OHIO PUBLIC WORKS FOR YOU

65 East State Street. Suite 312. Columbus. Ohio 43215

Commission Chair Patrick Ginnetti *Director* Linda S. Bailiff

Commissioners John Jones, Dean C. Ringle, Kimberly Marshall, Sandra Tunnell, Randy Riley

Todd Fischer, Finance Director
City of Brunswick
4095 Center Rd
Brunswick, OH 44212

Re: Project No. CI45W Laurel Road Reconstruction Phase II

Dear Mr. Fischer:

Financial assistance for City of Brunswick has been approved in the amount of $613,800. On or about July 01, 2019, assuming budget authority is in place, we will mail the Project Agreement for signature as well as Project Manager and Chief Fiscal Officer letters according to those names provided in the application. Construction may not begin until an executed Project Agreement is in place; however, engineering and design services may be initiated. Additional information is located on our website at www.pwc.ohio.gov.

If you have questions, please contact your Program Representative, Abbey DeHart, at 614 728-2466, or by email at abbey.dehart@pwc.ohio.gov.

Respectfully,

Linda S. Bailiff
Director

cc: Carl DeForest, Matthew M. Jones

CITY OF BRUNSWICK, OHIO
RESOLUTION NO. _____

BY:

AN EMERGENCY RESOLUTION AUTHORIZING THE CITY MANAGER TO ENTER INTO AN AGREEMENT WITH PERK COMPANY, INC. FOR THE LAUREL ROAD RECONSTRUCTION PHASE 2 PROJECT IN AN AMOUNT NOT TO EXCEED $840,357.00.

WHEREAS: The City of Brunswick received three (3) bids for the Laurel Road Reconstruction Phase 2 Project (the "Project"), in accordance with public bidding requirements;

WHEREAS: The three (3) received public bids were opened on July 3, 2019, with Perk Company, Inc. determined to be the lowest and best bidder; and

WHEREAS: The Project is being partially funded with a grant from the Ohio Public Works Commission in an amount not to exceed $613,800.00.

WHEREAS: THE COUNCIL OF THE CITY OF BRUNSWICK HEREBY RESOLVES:

SECTION 1: That the City Manager, with the approval of the Law Director, is hereby authorized and directed to enter into an Agreement with Perk Company, Inc. for the construction of the Laurel Road Reconstruction Phase 2 Project in an amount not to exceed $840,357.00.

SECTION 2: That this Resolution is hereby declared to be an emergency measure necessary for the immediate preservation of the public peace, property, health, safety or welfare, and for the additional reason that immediate passage is necessary for completion of the Project during the 2019 construction season. Therefore, the same shall be in full force and effect from and after its passage by the required number of votes or from the earliest time allowed by law.

PASSED: 1st Reading_____

Rules Suspended: AYES _____ NAYS _____

ADOPTED: _____ AYES _____ NAYS _____

ATTEST: _____
Clerk of Council
Fijabi Julie-Gallam, CMC

CITY OF BRUNSWICK, OHIO
RESOLUTION NO. 50-19

BY: Mrs. Rodriguez, Mr. Capretta and Mr. Hanek

AN EMERGENCY RESOLUTION AUTHORIZING THE CITY MANAGER TO ENTER INTO AN AGREEMENT WITH PERK COMPANY, INC. FOR THE LAUREL ROAD RECONSTRUCTION PHASE 2 PROJECT IN AN AMOUNT NOT TO EXCEED $840,357.00.

WHEREAS: The City of Brunswick received three (3) bids for the Laurel Road Reconstruction Phase 2 Project (the "Project"), in accordance with public bidding requirements;

WHEREAS: The three (3) received public bids were opened on July 3, 2019, with Perk Company, Inc. determined to be the lowest and best bidder; and

WHEREAS: The Project is being partially funded with a grant from the Ohio Public Works Commission in an amount not to exceed $613,800.00.

WHEREAS: THE COUNCIL OF THE CITY OF BRUNSWICK HEREBY RESOLVES:

SECTION 1: That the City Manager, with the approval of the Law Director, is hereby authorized and directed to enter into an Agreement with Perk Company, Inc. for the construction of the Laurel Road Reconstruction Phase 2 Project in an amount not to exceed $840,357.00.

SECTION 2: That this Resolution is hereby declared to be an emergency measure necessary for the immediate preservation of the public peace, property, health, safety or welfare, and for the additional reason that immediate passage is necessary for completion of the Project during the 2019 construction season. Therefore, the same shall be in full force and effect from and after its passage by the required number of votes or from the earliest time allowed by law.

PASSED: 1st Reading_____

Rules Suspended: AYES _____ NAYS _____

ADOPTED: _____ AYES _____ NAYS _____

ATTEST: _____
Clerk of Council
Fijabi Julie-Gallam, CMC